The force in torque management

tJRS

Joint Simulator Test Bench

The tJRS (threaded joint rate simulator) is the only fully automated joint simulator test bench that based on a threaded fastener.

This ultimately means that joint conditions can be set up in the same way as in real fastener applications and the joint can automatically be 'backed-off' after each test. As a result, assembly tools can be tested, offline, under the most realistic conditions of any automated joint simulator bench, in a quick and efficient manner.

Traditionally, automated joint test benches have used friction brake systems in place of a threaded fastener. The reasons for this were to overcome the two main issues which are having to reverse, or 'back-off', after each rundown and the cumbersome nature of re-configuring the joint characteristic.

Whilst friction brakes can easily be reset, removing the back-off issue, they introduce many of their own problems often resulting in the simulator having significantly different properties to actual joints the tools will be used on.

Crane's tJRS joint simulator test bench sets the standard for accurate and precision tool testing and torque management.

Key Features

- Innovative threaded fastener and nut mechanism
- Fully automated quick release and fastener reset
- Easily set up a variable joint rate from soft to hard
- 8-hours battery life with internal charger
- Test assembly tools in accordance with VDI/VDE 2647 standards
- Incorporates Crane's leading torque management software, OMS
- Torque, angle and impulse count with track, peak, click and pulse measurements
- More authentic and realistic testing conditions for all tool auditing requirements
- Robust, durable construction for reliable testing in the harshest of environments
- A stand-alone system or part of a complete torque measurement and quality auditing solution
- Available in 100, 250, 330, 500 and 1000 Nm ranges

tJRS - Joint Simulator Test Bench

Traditionally, automated joint simulators have used friction brake systems in place of a threaded fastener. The reasons for this were due to the two main reasons which were the requirement to reverse or 'back-off' after each run-down and the general cumbersome nature of reconfiguring the joint characteristic.

Whilst friction brake systems can easily be reset, removing the back off issue, they also introduce many of their own problems often resulting in the joint simulator having significantly different properties to actual joints and conditions that the assembly tools will be used on in production environments.

The revolutionary tJRS test bench combines all the benefits of using a threaded fastener mechanism with the added convenience of a fully automated simulator system.

Advantages over typical 'Friction Brake' test benches

Patented System - The patented tJRS eliminates 2 of the main issues usually found in threaded fasteners:

1. The tJRS automatically 'backs-off' and resets the nut after every cycle.
2. It automatically reproduces a precise joint rate without having to re-stack washers.

Low Inertia
As per the assembly operation, the tool only has to drive a nut onto a bolt with a standard inline torque transducer. There are no large, high mass, hard to drive braking systems which greatly affect the performance of the tool. With a threaded fastener, the torque vs. angle relationship is not time based, therefore variations in the tool speed will not change the joint rate.

Designed for use with Impulse Tools
Unlike typical friction brake systems, when testing impulse tools the threaded fastener does not continue to tighten between pulses which can adversely affect results.

Temperature Variations
The effects of variations of temperature on the system, specifically on angle drift, are significantly lower with a threaded fastener system.

Repeatability and Linearity
Both functions are significantly superior with the threaded fastener system incorporated within the tJRS joint simulator bench.

The tJRS system removes the need to manually reverse the fastener, or remove the tool drive during the 'back-off' process. This makes it an ideal tool for improving the efficiency of tool certification. It is particularly important when testing higher torque tools, many of which do not have a reverse gear.

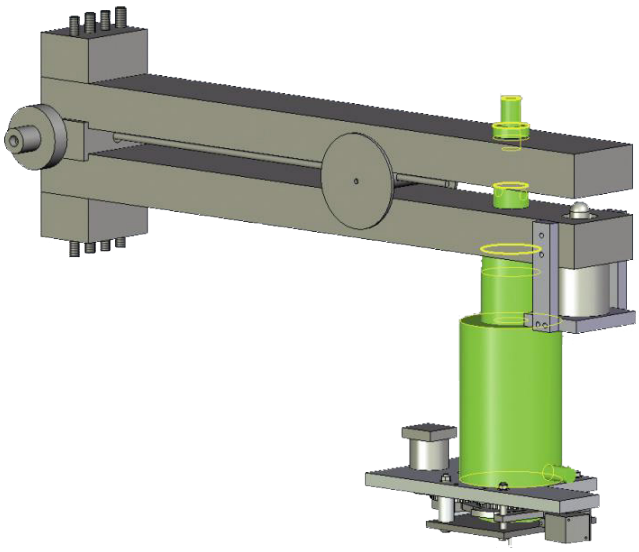

Another major advantage of using the tJRS test bench is the ability to change individual joint conditions through the OMS software interface rather than through a time consuming mechanical re-configuration.

Crane has pioneered the use of its patented twin beam systems using high quality precision materials.

This not only simplifies the setup process, but it also provides the user with an incredibly linear and repeatable test facility (following VDI/VDE 2647 guidelines).

As the joint conditions are stored in the database against each tool, the user can also be assured that the same conditions can be recalled whenever a given tool needs testing.

Service and Maintenance

As with all mechanical systems periodic servicing and maintenance is required. The tJRS was designed to make measuring and auditing torque quick and easy and the tJRS is just as simple to service.

- The automatically lubricated nut and bolt system utilizes a special coating for reduced wear and thousands of trouble free run-downs.
- When required, operators can simply remove and install nut and bolt replacements in minutes
- Industry-leading CheckStar transducers can easily be removed for annual calibration
- The tJRS implements an automatic greasing facility for continuous usage
- Accessible and removable torque data collector system
- ISO17025 accredited calibration Crane laboratories in the UK and US

Configuration

The tJRS is a modular system which allows the user to select from a number of torque ranges, or beams. This ensures the configuration of a unit which can best meets the customers requirement. The modular design also enables specific custom units.

For units with multiple beams, the tJRS automatically selects the transducer to use and informs the operator via a clear graphical notification.

For an even greater degree of control when testing tools that are particularly susceptible to excessive inertia, or when tools have non-standard drive sizes, the transducer on the beam can be changed for a more suitable size. This ensures the user is always using the appropriate device and removing the need for drive adapters that often cause inaccuracies.

The tJRS joint simulator bench can either be configured as a stationary unit or mounted on wheels to provide mobile operation. The on-board batteries are designed to give a full shift of normal operation, on a single charge.

In addition to the mobile operation, the tJRS also allows the operator to use in-line torque transducers and the data collector/readout, to certify tooling in situ when it cannot be readily accessible for testing directly on the simulator. This ensures that all tool management is performed in common within the same database.

A popular optional accessory for the tJRS is the wrench testing fixture, the WrenchLoader. This convenient addition expands the range of the tJRS to help test and audit hand operated wrenches.

An ISO6789 compatible version of the WrenchLoader is also available, please contact us for more information.

Item	Product Code	Product
100Nm tJRS	**TJMXX-0100-CRABXX**	tJRS
250Nm tJRS	**TJMXX-0250-CRAGKX**	tJRS
330Nm tJRS	**TJMXX-0330-CRJEXX**	tJRS
500Nm tJRS	**TJMXX-0500-CRABCX**	tJRS
1000Nm tJRS	**TJP1X-1000-CRLEJX**	tJRS

tJRS - Technical Specifications

Mounting	**100Nm, 250Nm, 330Nm & 500Nm tJRS** On 4 wheels:- 2 fixed, 2 swivel with brakes. Wheel diameter 200mm. **1000Nm tJRS** On a carrier that can accept pull truck or be left in a fixed location. Mounted on 4 feet.
Surface	Oil resistant engineering plastic.
Power/Battery	Powered by 2 x 12V sealed lead acid batteries that gives approximately 8 hours of typical use on a full charge. Internal battery charger is fitted to charge batteries in 10 hours from a 100-240V mains voltage. Operates when the batteries are being charged. PC receives power from the internal batteries, but if mains voltage is available, then this will be used instead to conserve battery charge. Self-powered USB hub with 4 connections is provided for peripherals to be attached to PC.
Hydraulics	Working pressure is 200 bar. Smaller beams work at lower pressure. Hydraulic washers take the clamp load and will be used to release the clamp load at the end of the tightening.
Controller	Touch panel PC with solid state hard drive. Single licence of OMS for standalone use on the tJRS. OMS modules and SQL database. Threaded JRS Controller.
Operation	Follows the guidelines in VDI/VDE 2647. A traffic light system operates to inform the operator when to run down the tool. There are safety mechanisms in case the operator ignores the NO GO signal. Peak, impulse and click testing are permitted on the beam joints. The operation time allows 30 run-downs in 3 minutes dependent on tool and joint type. The joint is automatically reset without the tool needing to be removed.
Environment	Operates between +10C and +30C. Indoor use only.

tJRS - Technical Specifications

Measurement Units	**100Nm / 250Nm / 330Nm tJRS** Maximum Torque: 100Nm / 250Nm / 330Nm Minimum Torque: 1Nm **500Nm tJRS** Maximum Torque: 500Nm Minimum Torque: 1Nm **1000Nm tJRS** Maximum Torque: 1000Nm Minimum Torque: 1Nm
Weight	Depends on configuration.
Beams	**250Nm tJRS** 250Nm, 50Nm and 10Nm beams **330Nm tJRS** 330Nm and 25Nm beams **500Nm tJRS** 500Nm, 100Nm and 10Nm beams **1000Nm tJRS** 1000Nm, 330Nm and 25Nm beams
Bolts and Nuts	Bolts and nuts are replaceable and removable from the top. Each bolt, thread and under collar nut has its own automatic greasing system.
TorqueStar	Standard TorqueStar Opta with OMS (Opta Management Software) automatically selects the required CheckStar transducer.
CheckStar	Each CheckStar has a military connector allowing it to be removed. The tJRS identifies which CheckStar and beam are being used. **500Nm tJRS** ¾” drive Rotary UTA with Angle for use on the 500Nm beam ½“ drive Rotary UTA with Angle for use on 100Nm beam ¼“ drive Rotary UTA with Angle for use on 10m beam **1000Nm tJRS** 1” drive Rotary UTA with Angle for use on the 1000Nm beam ½“ drive Rotary UTA with Angle for use on 330Nm beam 3/8“ drive Rotary UTA with Angle for use on 25m beam
Dimensions	**100Nm, 250Nm, 330Nm & 500Nm tJRS** 1100mm (1200mm including handle) x 600mm x 940mm (L x W x H) Base above floor = 230mm **1000Nm tJRS** 1400mm x 700mm x 940mm (L x W x H) Base above floor = 140mm
Reaction Posts	Standard reaction posts placed at appropriate positions that can take the forces generated by the torque. The posts will slide fit in their holders for ease of use.

For pricing, availability or further technical information about the tJRS joint simulator test bench, please contact us online at www.crane-electronics.com or alternatively email us at sales@crane-electronics.com.

The force in torque management

Locations

Crane Electronics Ltd
Watling Drive,
Sketchley Meadows
Hinckley LE10 3EY
United Kingdom
Tel: +44 (0) 1455 25 14 88
sales@crane-electronics.com

Crane Electronics Inc
1260 11th Street West,
Milan,
Illinois 61264
USA
Tel: +1 309-787-1263
salesusa@crane-electronics.com

Crane Electronics GmbH
Im Rank 5,
73655 Plüderhausen,
Germany
Tel: +49 (0)7181 9884-0
salesde@crane-electronics.com

Global
Crane Electronics has a worldwide network of dedicated distributors located across the globe. For your nearest official Crane distributor, please visit **www.crane-electronics.com**.