Universal™ burnishing tools

For burnishing shafts, faces, tapers, contours, and relatively large IDs (greater than 2.750 inches/69.85mm)

- *Boring-bar style and Indexable turning-holder style designs*
- *Tool designs to suit any part size or configuration, or any turning machine*
- *Low surface finishes*
- *Standard, available off-the-shelf*
- *Adjustable for optimum burnishing pressure*
- *Hardened steel or carbide rollers*

UBT-T1 indexable turning-holder style burnishing tool

(Left-hand tool shown)

UBT-B1 boring-bar style burnishing tool

Versatility

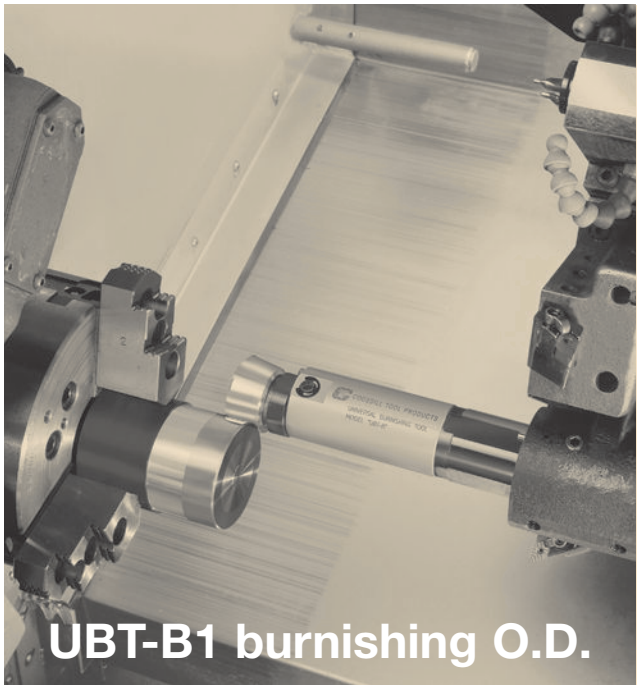

UBT-B1 burnishing O.D.

UBT-B1 burnishing face

UBT-T1 burnishing taper

(Left-hand tool shown)

Burnish
any size, any configuration, on any turning machine.

Turning-holder style

UBT-T1

UBT-T2

UBT-T2 with force gauge

UBT-T3

Roll shield not installed

Roll shield installed above

UBT-T3 with force gauge

Roll shield not installed

Turning-holder style

UBT-T1

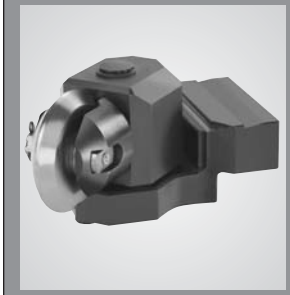

FOR BURNISHING OUTSIDE DIAMETERS, FACES, TAPERS, AND CONTOURS

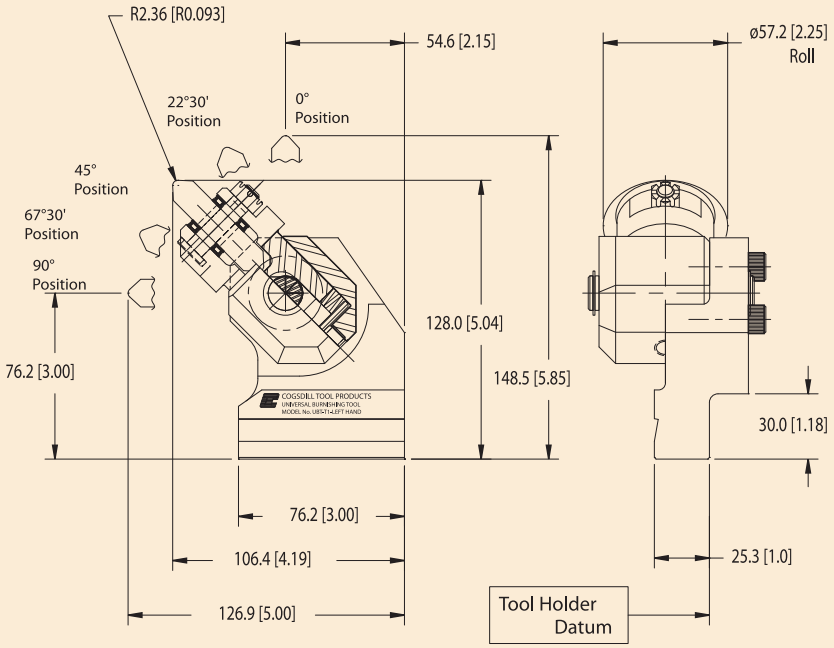

LEFT HAND

UBT-T1-LH

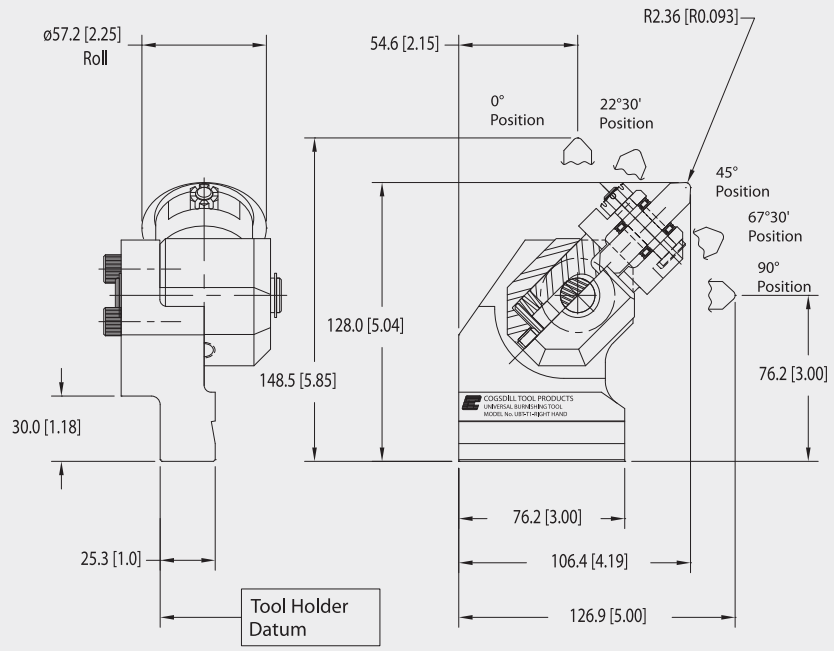

RIGHT HAND

UBT-T1-RH

Turning-holder style

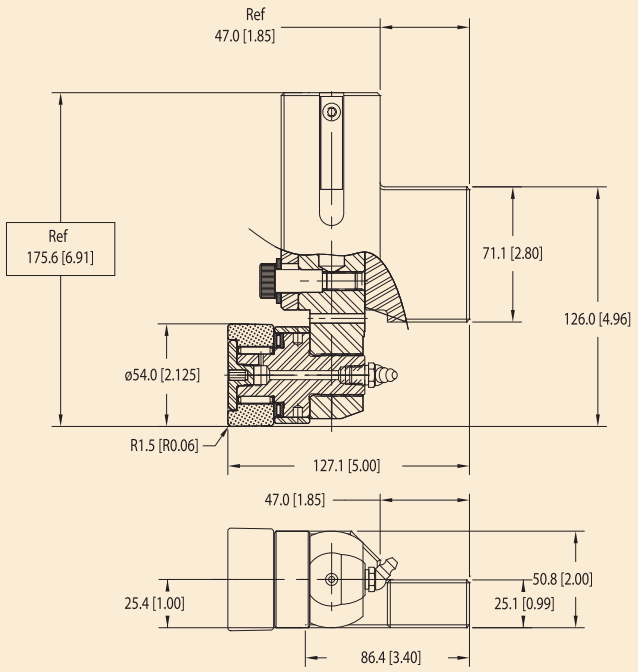

UBT-T2-LH **LEFT HAND**

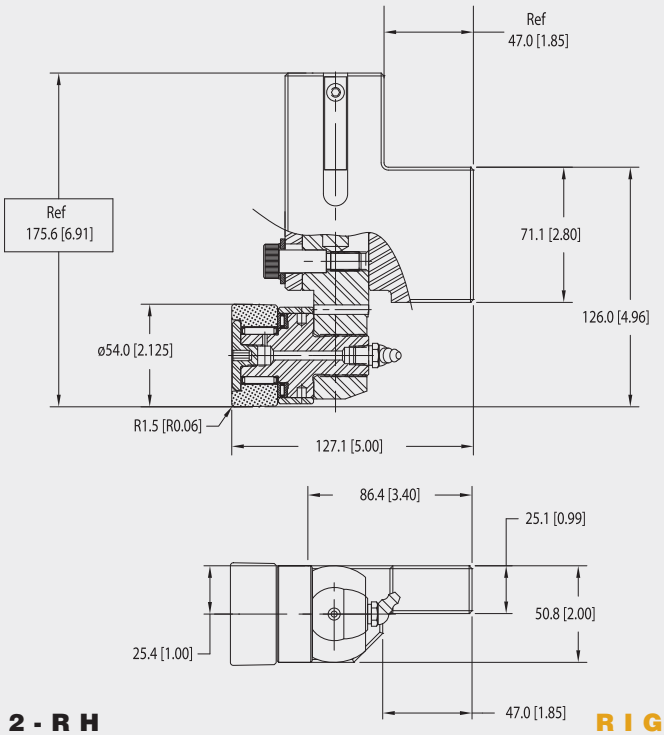

UBT-T2-RH **RIGHT HAND**

UBT-T2

FOR BURNISHING OUTSIDE DIAMETERS

Turning-holder style

UBT-T3

FOR

BURNISHING LARGE

OUTSIDE DIAMETERS,

(GREATER THAN

100mm/4.00 in.)

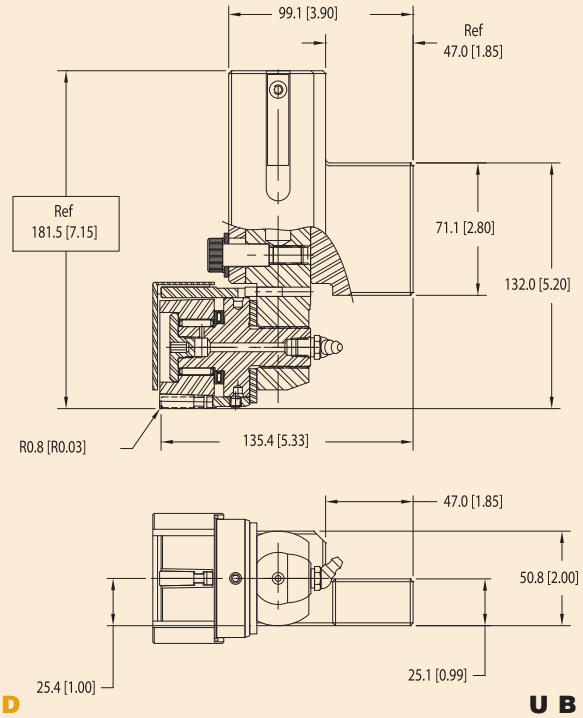

LEFT HAND

UBT-T3-LH

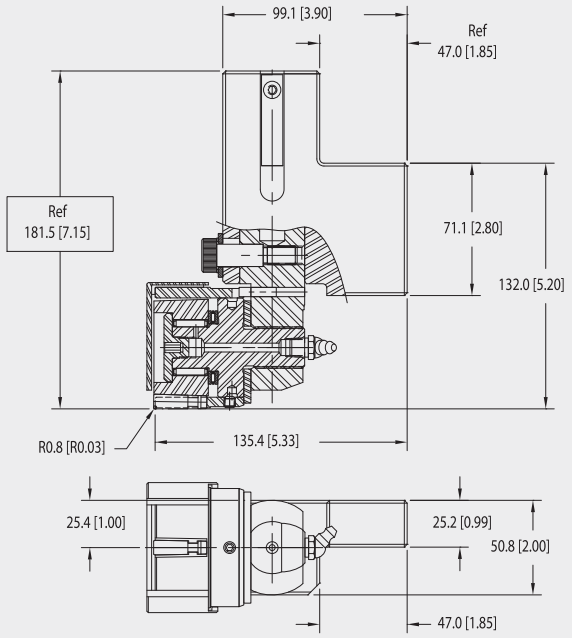

RIGHT HAND

UBT-T3-RH

Set-up and operating instructions for UBT-T Tools

Note: UBT™ single-roll burnishing tools do not have the advantage of an overlapping effect as with multi-roll tools, and for this reason slower feed rates and/or multiple passes over the part may be required in order to produce the desired finish.

UBT-T1 tool set-up

Loosen the load *adjusting screw*. Retighten the *adjusting screw* until it comes into contact with the spring. Continue to tighten screw 1/2 turn past snug. This is a recommended starting point for mild steel.

Adjustments can be made to the burnishing force to achieve optimum finish. Tighten the *adjusting screw* clockwise one turn to increase the burnishing force, or counterclockwise to reduce the force.

Roll orientation is adjustable in 22°-30' increments. Loosen *mounting screws* two turns. Lift *housing* from *shank*. Rotate to desired position, making sure castellations are engaged. Tighten *mounting screws*.

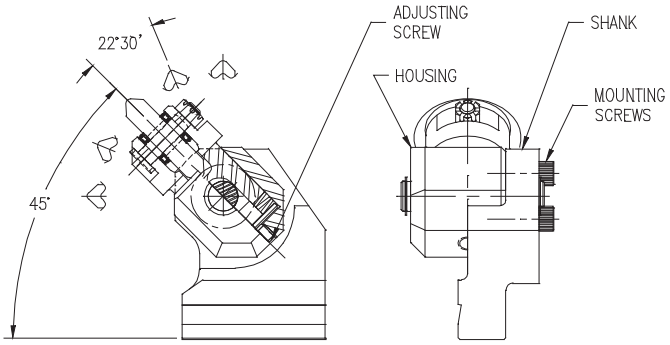

Left hand style shown

UBT-T2 tool set-up

Loosen the load *adjusting screw*. Retighten the *adjusting screw* until it comes into contact with the spring. Continue to tighten screw four turns past snug. This is a recommended starting point for mild steel.

Adjustments can be made to the burnishing force to achieve optimum finish. Tighten the *adjusting screw* clockwise to increase the burnishing force, six turns total, or counterclockwise to reduce the force.

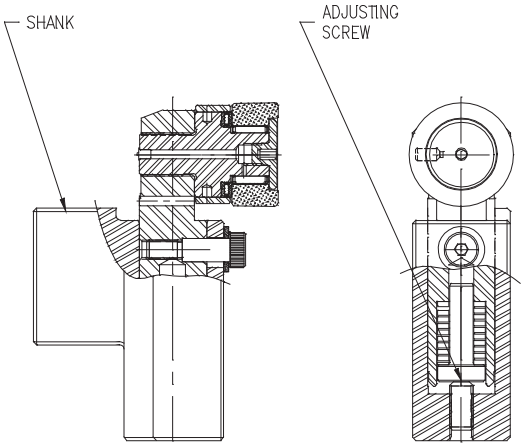

Left hand style shown

UBT-T3 tool set-up

Loosen the load *adjusting screw*. Retighten the *adjusting screw* until it comes into contact with the spring. Continue to tighten screw two turns past snug. This is a recommended starting point for mild steel.

Adjustments can be made to the burnishing force to achieve optimum finish. Tighten the load *adjusting screw* clockwise to increase the burnishing force, six turns total, or counterclockwise to reduce the force.

To index to a new roll station, pull off *cover*. Loosen *locking screws* and slide *cage* forward approximately 0.157 (4.0mm) until it disengages from *pin*. Rotate *cage* approximately 60°, until *pin* aligns with slot in *cage*, and push back. Tighten locking screws and replace *cover* in position shown.

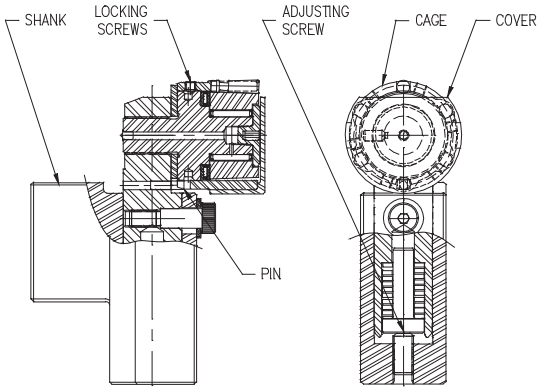

Left hand style shown

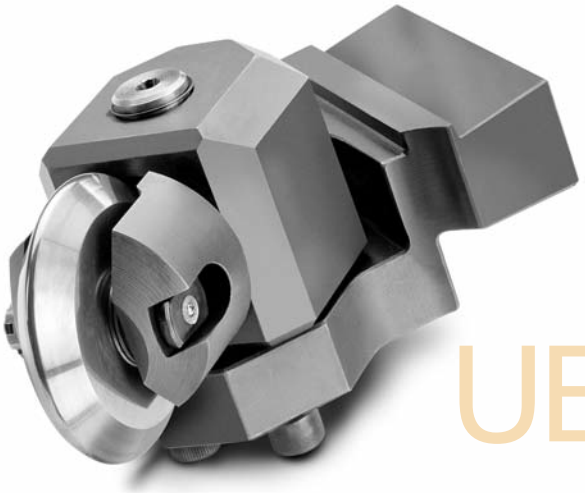

UBT-T TOOLS

Set-up and operating instructions for UBT-T tools

UBT-T tool operation

Mount any UBT-T tool in the desired turning station. Use a UBT-T tool that corresponds with the respective turning tool. Bring the tool into contact with the part to be burnished; contact has occurred when you see the mandrel rotating.

Feed the tool another 0.003-0.005 inch (0.08-0.13mm) into the part to provide interference between the roll and part so that the roll will float in its spring travel. Interference should not be used to increase burnishing force; burnishing force should only be adjusted with the load adjusting screws. This ensures the tool can be fed on/off the part and across interruptions without damage to the tool or workpiece.

For optimum results and long tool life, coolant is required. Any soluble, synthetic, or straight oil can be used. Whenever possible, and for best results, the tool should be fed towards the spindle when burnishing diameters and towards the centerline when burnishing faces. (Note: UBT-T2 and UBT-T3 tools cannot be used to burnish faces.)

ROLLS FOR UBT-T TOOLS

ITEM NO.	TOOL TYPE	ROLL TYPE & RADIUS
UBT-006	UBT-T1	HARDENED STEEL, .093 IN. (2.36MM)
UBT-007	UBT-T1	HARDENED STEEL, .030 IN. (0.76MM)
UBT-010	UBT-T1	CARBIDE, .093 IN. (2.36MM)
UBT-015	UBT-T2	HARDENED STEEL, .060 IN. (1.52MM)
UBT-016	UBT-T2	CARBIDE, .060 IN. (1.52MM)
6100-708-00312	UBT-T3	HARDENED STEEL, .030 IN. (0.76MM)

Speed and feed recommendations for UBT-T tools

SPEED	
SFM	M/MIN.
750	230

FEED	
IPR	MM/REV.
0.001/0.006	0.02/0.15

Lubrication of UBT-T tools

All UBT-T tools should be periodically greased (approximately every 24 hours of operation). We recommend the use of high-quality Lithium complex grease.

UBT-T Tools with force gauge

- *Adaptable to all new UBT-T2 and UBT-T3 tools.*
- *Gauge available in English units (pounds) or metric units (newtons).*

UBT-T2 with gauge

COMPLETE TOOL	
UBT-T2-LH-GS	LH TOOL W/ENGLISH (POUNDS) GAUGE
UBT-T2-LH-GM	LH TOOL W/METRIC (NEWTONS) GAUGE
UBT-T2-RH-GS	RH TOOL W/ENGLISH (POUNDS) GAUGE
UBT-T2-RH-GM	RH TOOL W/METRIC (NEWTONS) GAUGE

GAUGE ASSEMBLY	
UBT-T2-LH-GSA	LH ENGLISH (POUNDS) GAUGE
UBT-T2-LH-GMA	LH METRIC (NEWTONS) GAUGE
UBT-T2-RH-GSA	RH ENGLISH (POUNDS) GAUGE
UBT-T2-RH-GMA	RH METRIC (NEWTONS) GAUGE

LH- LEFT HAND RH - RIGHT HAND

UBT-T3 with gauge

COMPLETE TOOL	
UBT-T3-LH-GS	LH TOOL W/ENGLISH (POUNDS) GAUGE
UBT-T3-LH-GM	LH TOOL W/METRIC (NEWTONS) GAUGE
UBT-T3-RH-GS	RH TOOL W/ENGLISH (POUNDS) GAUGE
UBT-T3-RH-GM	RH TOOL W/METRIC (NEWTONS) GAUGE

GAUGE ASSEMBLY	
UBT-T3-LH-GSA	LH ENGLISH (POUNDS) GAUGE
UBT-T3-LH-GMA	LH METRIC (NEWTONS) GAUGE
UBT-T3-RH-GSA	RH ENGLISH (POUNDS) GAUGE
UBT-T3-RH-GMA	RH METRIC (NEWTONS) GAUGE

LH- LEFT HAND RH - RIGHT HAND

UBT-T Tools force gauge assembly

UBT-T force gauge assembly

- *For use on UBT-T2 and UBT-T3 tools.*
- *Available with English (pounds) or metric (newtons) gauge.*
- *Two mounting brackets are supplied with the gauge assembly allowing mounting of the gauge on either side of the tool offering optimum viewing of the gauge.*

UBT-T force gauge adjustment procedure

UBT-T gauge adjustment

- Adjust **load adjusting screw** to touch internal spring.
- Set indicator to "0" with **zero indicator screw**.
- Tighten **load adjusting screw** until desired load is shown on indicator.
- Touch off on part.
- Compress tool onto part approximately 5 pounds (22 newtons) as shown on the indicator.

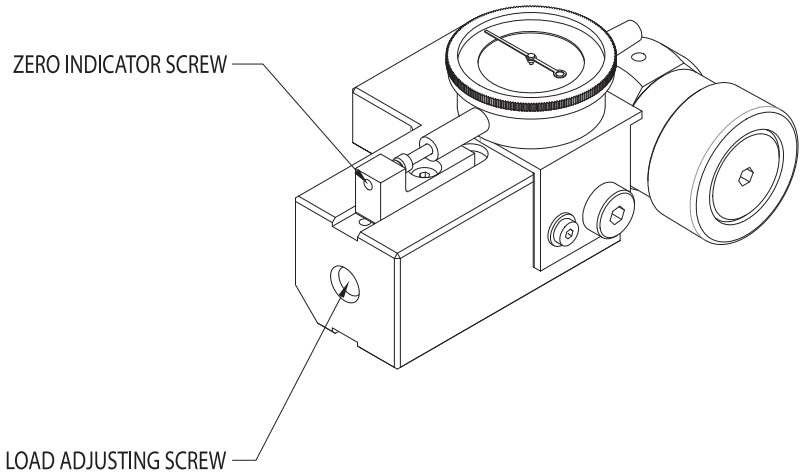

Boring-bar style

Boring-bar style

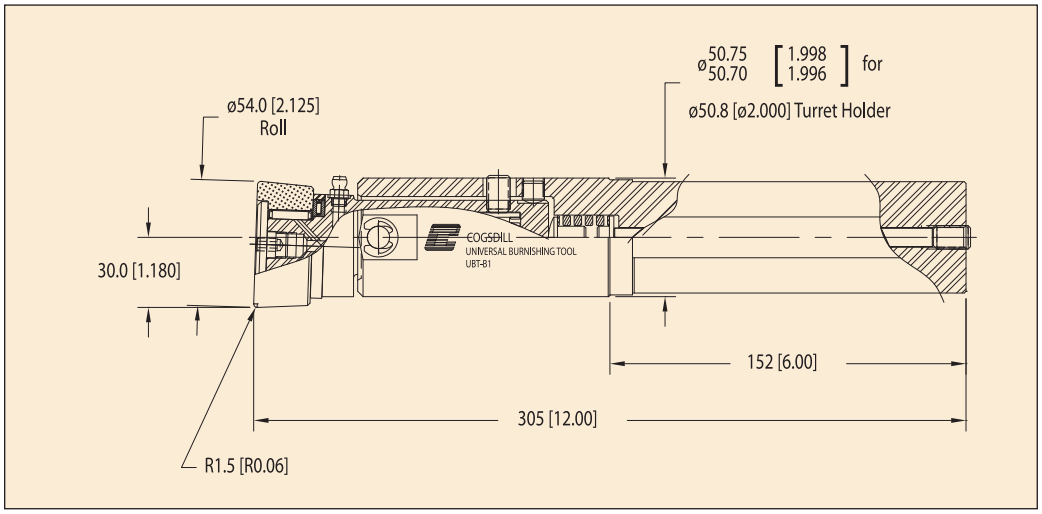

UBT-B1

FOR BURNISHING OUTSIDE DIAMETERS, FACES, AND LARGE INSIDE DIAMETERS (ID'S GREATER THAN 70mm/2.75 in.)

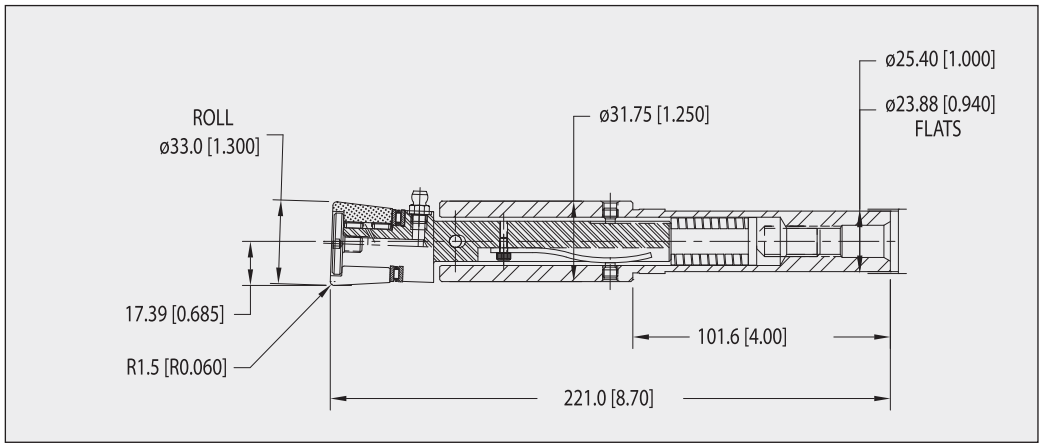

UBT-B2

A SMALLER VERSION OF THE UBT-B1 (ID'S GREATER THAN 39.6mm/1.56 IN.)

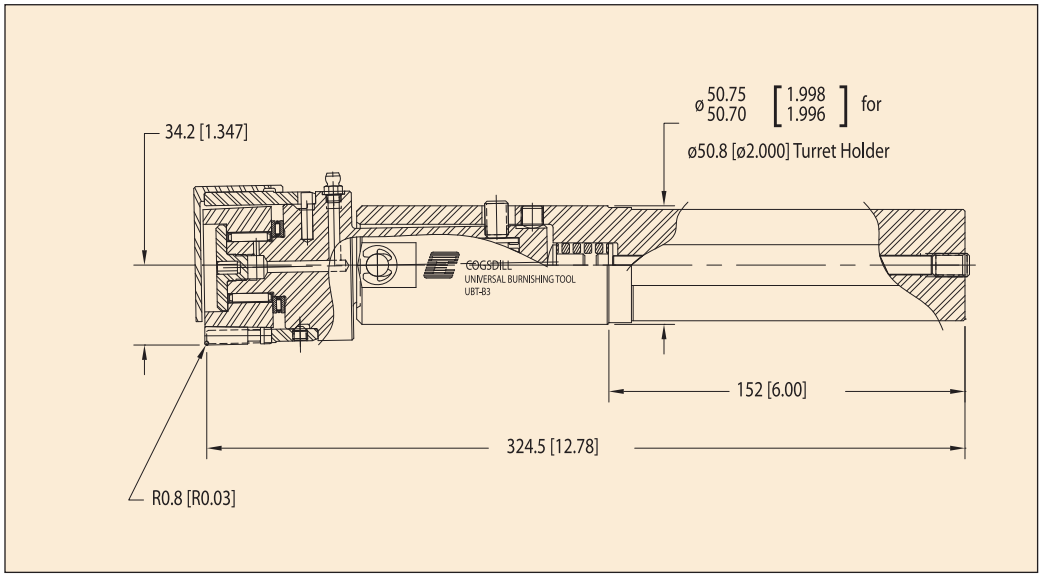

UBT-B3

FOR USE IN SMALLER INSIDE DIAMETERS (IDS GREATER THAN 70MM/2.75 IN.) OR ON LARGE OUTSIDE DIAMETERS (GREATER THAN 100mm/4.00in.)

Set-up and operating instructions for UBT-B Tools

Note: UBT™ single-roll burnishing tools do not have the advantage of an overlapping effect as with multi-roll tools, and for this reason slower feed rates and/or multiple passes over the part may be required in order to produce the desired finish.

UBT-B1 tool set-up

Loosen the load *adjusting screws*. Retighten the *adjusting screws* until they come into contact with the spring. Continue to tighten both screws one turn past snug. This is a recommended starting point for mild steel.

Adjustments can be made to the burnishing force to achieve optimum finish. Tighten the *adjusting screws* clockwise to increase the burnishing force, three turns total, or counterclockwise to reduce the force.

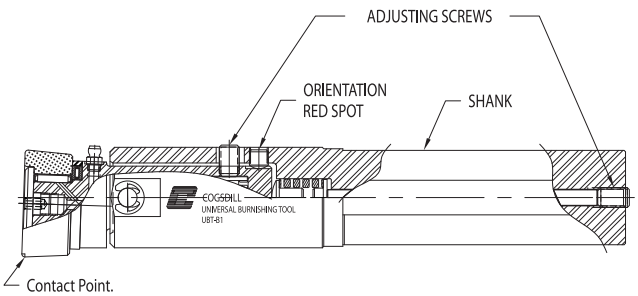

UBT-B2 tool set-up

Loosen the load *adjusting screws*. Retighten the *axial adjusting screw* until it comes into contact with the spring. Continue to tighten three turns past snug. This is a recommended starting point for mild steel.

Tighten the *radial adjusting screw* until it comes into contact with the spring. Continue to tighten 1-1/2 turns past snug. Do not tighten beyond this point; overloading this screw will not allow the tool to float on its spring travel and will impede tool function.

Adjustments can be made to the burnishing force to achieve optimum finish. Tighten the *axial adjusting screw* only. Turn clockwise to increase burnishing force, for a total of 6-1/2 turns, or counter-clockwise to reduce the force.

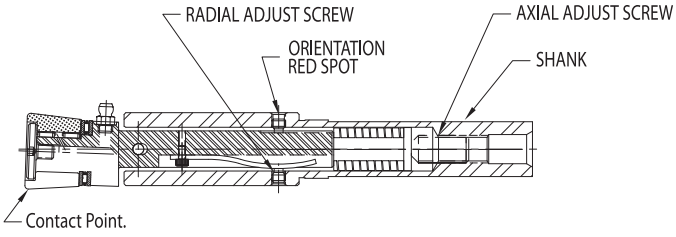

UBT-B3 tool set-up

Loosen the load *adjusting screws*. Retighten the *adjusting screws* until they come into contact with the spring. Continue to tighten both screws one turn past snug. This is a recommended starting point for mild steel.

Adjustments can be made to the burnishing force to achieve optimum finish. Tighten the *adjusting screws* clockwise to increase the burnishing force, for a total of three turns, or counterclockwise to reduce the force.

To index to a new roll station, pull off *cover.* Loosen *locking screws* and slide *cage* forward approximately 0.157 (4.0mm) until it disengages from *pin*. Rotate *cage* approximately 60°, until *pin* aligns with slot in *cage*, and push back. Tighten *locking screws* and replace *cover* in position, exposed *roll* opposite orientation red spot.

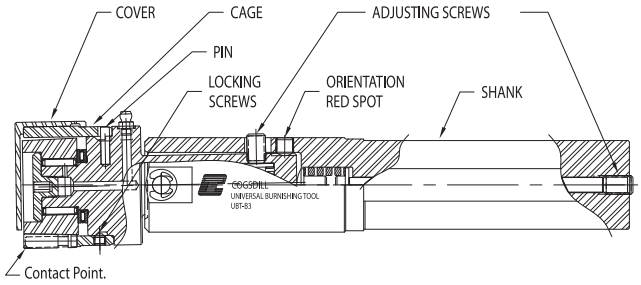

UBT-B TOOLS

Set-up and operating instructions for UBT-B tools

UBT-B tool operation

Mount any UBT-B tool in the desired boring bar station. (Note: The red orientation spot *must* be opposite the contact point.) Bring the tool into contact with the part to be burnished.

Feed the tool another 0.003-0.005 inch (0.08-0.13mm) into the part to provide interference between the roll and part so that the roll will float in its spring travel. Interference should not be used to increase burnishing force; burnishing force should only be adjusted with the load adjusting screws. This ensures the tool can be fed on/off the part and across interruptions without damage to the tool or workpiece.

For optimum results and long tool life, coolant is required. Any soluble, synthetic, or straight oil can be used. Whenever possible, and for best results, the tool should be fed towards the spindle when burnishing diameters and towards the centerline when burnishing faces. (Note: the UBT-B3 tool cannot be used to burnish faces.)

ROLLS FOR UBT-B TOOLS

ITEM NO.	TOOL TYPE	ROLL TYPE & RADIUS
UBT-001	UBT-B1	HARDENED STEEL, .060 IN. (1.52MM)
UBT-002	UBT-B1	CARBIDE, .060 IN. (1.52MM)
UBT-003	UBT-B1	HARDENED STEEL, .030 IN. (0.76MM)
UBT-018	UBT-B2	HARDENED STEEL, .060 IN. (1.52MM)
UBT-019	UBT-B2	CARBIDE, .060 IN. (1.52MM)
6100-708-00312	UBT-B3	HARDENED STEEL, .030 IN. (0.76MM)

Speed and feed recommendations for UBT-B tools

SPEED	
SFM	M/MIN.
750	230

FEED	
IPR	MM/REV.
0.001/0.006	0.02/0.15

Lubrication of UBT-B tools

All UBT-B tools should be periodically greased (approximately every 24 hours of operation). We recommend the use of high-quality Lithium complex grease.