Burnishing
TOOLS & MACHINES

Burnishing

contents

2 OVERVIEW OF ROLLER BURNISHING

7 INTERNAL ROLLER BURNISHING TOOLS
7 SRMR/SRMB Series Roll-a-Finish® Tools
17 Bearingizing Tools

22 EXTERNAL ROLLER BURNISHING TOOLS
22 XBB Series Roll-a-Finish® Tools

30 ROLL-A-FINISH® TOOL SELECTION AND ORDERING

31 PART PREPARATION AND OPERATING PARAMETERS

36 SPECIAL APPLICATIONS AND TOOL DESIGNS

38 CX® EXTERNAL ROLLER BURNISHING MACHINES

46 SINGLE CONTACT BURNISHING TOOLS
46 Diamond Burnishing Tools
50 Universal™ Burnishing Tools

64 KB® KNURLING-BURNISHING PROCESS

70 BURNISHING APPLICATION DATA SHEET

© COPYRIGHT 2013 COGSDILL TOOL PRODUCTS, INC.

CATALOG NO. 500 UK 2-13

Roller burnishing overview

Cogsdill Roll-a-Finish tools offer you a fast, clean, and economical method of sizing and finishing metal parts to exacting specifications. The tools can be operated on any spindle. Parts of virtually any configuration and material are accurately sized within microns, with surface finishes as fine as 0.05 micrometers (2 microinches)... *in seconds!* An additional benefit: roller burnishing work hardens the part surface, producing a dense, compacted, wear-resistant surface for longer part life. Parts are improved, with faster production, and at a lower cost.

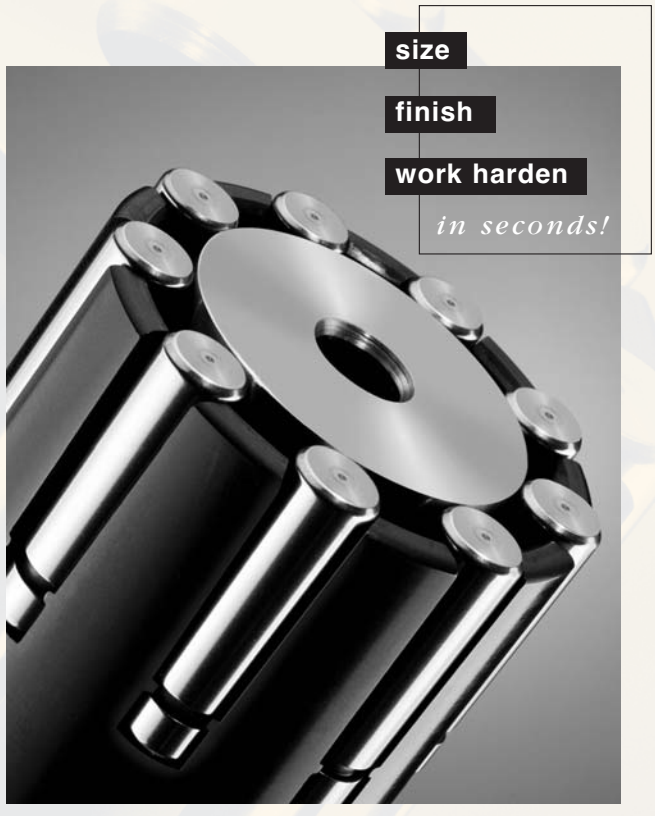

Burnishing
TOOLS & MACHINES

Universal Burnishing Tools

Boring-Bar Style

Turning-Holder Style

Bearingizing Tools

External Roll-a-Finish® Tools

CX® External Roller Burnishing Machines

Internal Roll-a-Finish® Tools

We are pleased to offer the widest array of standard burnishing products in the industry, supported by the broadest range of experience in application engineering and custom tool design. Let us provide you with burnishing s o l u t i o n s to meet your sizing and finishing needs, with faster production and at a lower cost.

Diamond Burnishing Tools

COGSDILL-NUNEATON LTD.

Burnishing products shown here are *not* to scale.

Roller burnishing overview

roll • er burn • i • shing defined

Roller burnishing is a surface finishing technique in which hardened, highly polished steel rollers are brought into pressure contact with a softer piece part. As the pressure generated through the rollers exceeds the yield point of the piece-part material, the surface is plastically deformed by cold flowing of sub-surface material. The result is a mirror-like finish and a tough, work-hardened surface with load-carrying characteristics which make the burnished surface superior to finishes obtained by abrasive metal-removal methods.

A roller burnished surface is smoother and more wear-resistant than an abraded surface of the same profilometer reading. Profilometers measure roughness height. Abrasive finishing processes remove metal by cutting or tearing it away, and while this usually lowers the roughness profile, it leaves sharp projections in the contact plane of the machined surface.

Roller burnishing displaces metal, rather than removing it. Material in microscopic "peaks" on the machined surface is caused to cold flow into the "valleys," creating a plateau-like profile in which sharpness is reduced or eliminated in the contact plane. A burnished surface is therefore smoother than an abraded surface with the same roughness height measurement. The burnished surface will last longer under working conditions in contact with a mating part.

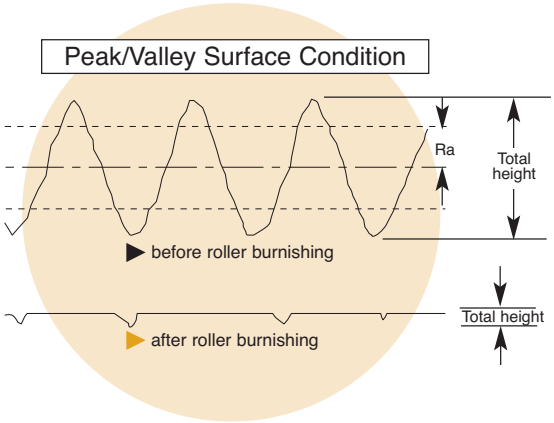

Process advantages and benefits of burnishing

There are *four primary benefits* of the roller burnishing process:

1. Improved surface finish – as fine as 0.05 to 0.1 micrometers (2 to 4 microinches) (Ra)
2. Improved size control – tolerances within .01mm (.0005 inch) or better
3. Increased surface hardness – up to 5 to 10% or more
4. Improved fatigue life – as much as 300% or better

Other benefits include:

- Reduced friction
- Reduced noise level
- Enhanced corrosion resistance
- Elimination of tool marks and minor surface imperfections
- Replaces expensive secondary operations, such as grinding, honing, or lapping
- Cleaner than honing or other abrasive operations
- Faster production, at a lower cost, as compared to other finishing processes – parts are sized, finished, and work-hardened... in seconds!

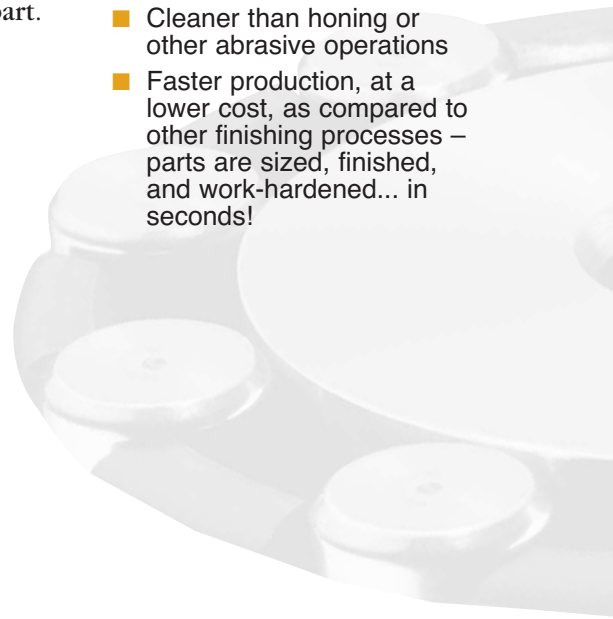

CX external roller burnishing machines

diamond burnishing tools

KB Knurling-Burnishing Process

universal burnishing tools

bearingizing tools

Roll-a-Finish® tools for all types of part configurations

Cogsdill Roll-a-Finish tools are applied to a wide variety of part configurations, including:

- Inside diameters (holes)
- Outside diameters (shafts)
- Flat surfaces
- Tapers
- Spherical surfaces and contours
- Fillets (radii at shoulders)

Standard Roll-a-Finish tools are available from stock for inside diameters from 4,00 to 50,00mm (.157 to 1.968 inch). The tools are easily adjustable over a typical range of 1,00mm (.040 inch). Special designs are available for larger and smaller diameters, and for tapers, faces, contours, and virtually any part configuration.

Other Cogsdill burnishing tool products

In addition to Roll-a-Finish tools for IDs, ODs, and special part configurations, Cogsdill offers several other burnishing products and related items, including:

- *Bearingizing Tools*, for burnishing IDs in parts with thin walls or irregular wall thicknesses, or in applications where porosity retention or extremely close tolerances are required
- *CX® External Roller Burnishing Machines*, for sizing, finishing, and work-hardening cylindrical surfaces of any length
- *Diamond Burnishing Tools*, for generating mirror finishes on ODs, large IDs, or faces of virtually any diameter
- *Universal Burnishing Tools*, for burnishing ODs, large IDs, faces, tapers, contours, and irregular surfaces with a single roll
- *The KB Knurling-Burnishing Process*, for salvaging out-of-tolerance bores and shafts: a two-step process using Cogsdill knurling tools and Roll-a-Finish tools

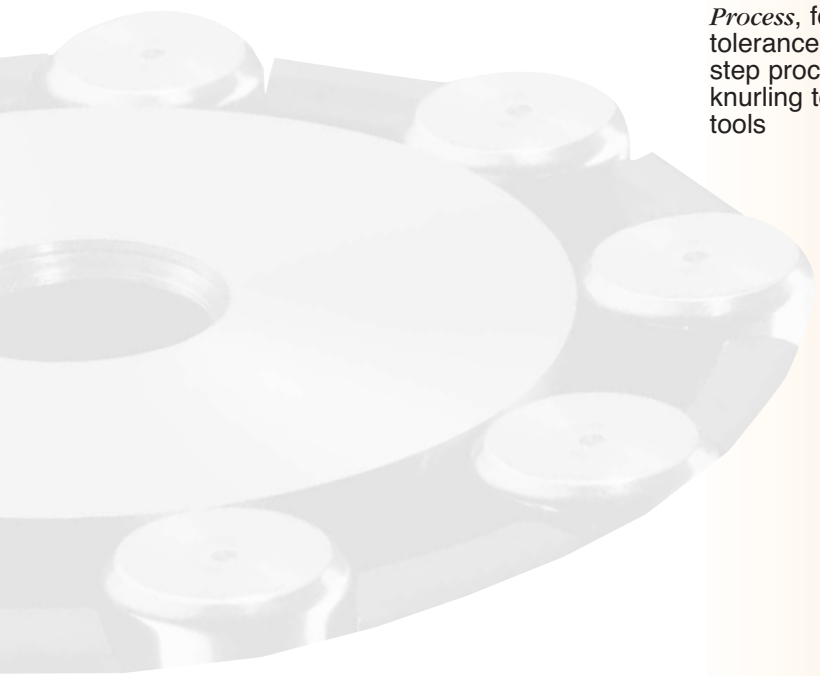

Internal Roll-a-Finish® tools

SRMR/SRMB series

Our premier line of internal Roll-a-Finish® tools, designed to suit all applications. Ideal for applications where tool length is restricted by tool changers, turrets, etc.

Offered in *three styles:*

- Through-hole style with no-helix cage (machine-feeding) as standard.
- Through-hole style with helix cage (self-feeding), made to order.
- Bottoming-style for blind hole, with no-helix cage (machine-feeding) as standard.

... with up to *three work lengths:*

- SRMR (B)
- SRMR (B)+50mm
- SRMR (B)+100mm
- Longer lengths available on request.

... and *available from stock:*

- for hole sizes from 4,00 to 50,00 mm (.157 to 1.968 inches).
- Tools are adjustable in increments of .002mm (.0001 inch).

Standard tool specifications

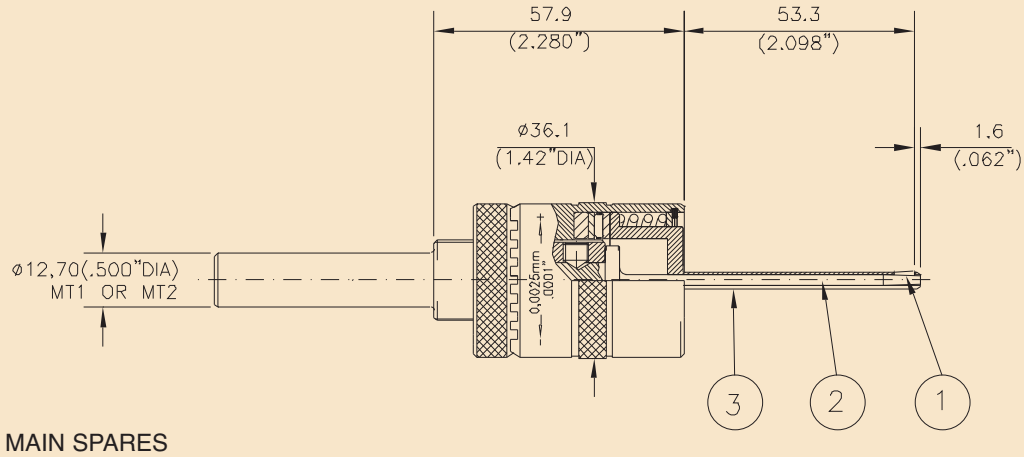

MAIN SPARES
1. ROLLS (3/TOOL)
2. MANDREL CONE
3. CAGE

SRMR SERIES ROLL-A-FINISH® TOOLS 4,0 to 5,75mm (.157" to .226")

DIAMETER RANGE				TOOL NUMBER		
MIN		MAX		THRO-HOLE	BOTTOMING	SELF-FEED OPTION
mm	Inches	mm	Inches	(No Helix)	(No Helix)	($1^1/_2$° Helix)
3,97	.156	4,25	.167	SRMR 4	-	-
4,22	.166	4,50	.177	SRMR 4,25	-	-
4,47	.176	4,75	.187	SRMR 4,50	-	-
4,72	.186	5,00	.197	SRMR 4,75	-	-
4,97	.196	5,25	.207	SRMR 5	-	Thro-Hole only
5,22	.206	5,50	.217	SRMR 5,25	-	Thro-Hole only
5,47	.215	5,75	.226	SRMR 5,50	-	Thro-Hole only
5,72	.225	6,00	.236	SRMR 5,75	-	Thro-Hole only

Tools other than shown above are available upon request.

Standard tool specifications

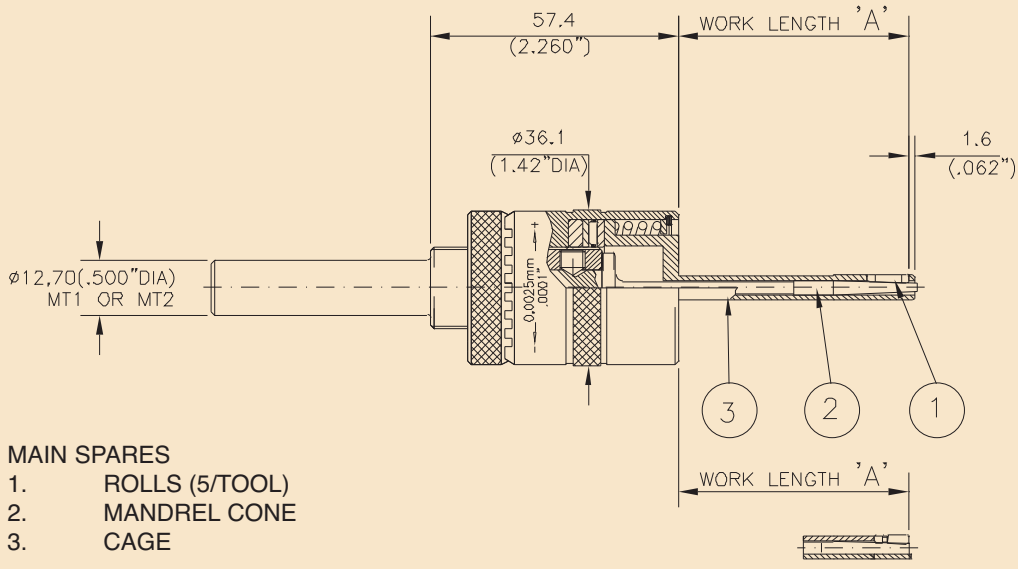

MAIN SPARES
1. ROLLS (5/TOOL)
2. MANDREL CONE
3. CAGE

'SRMB' SERIES

SRMR/SRMB SERIES ROLL-A-FINISH® TOOLS 6,0 to 12,5mm (.236" to .492")

DIAMETER RANGE				TOOL NUMBER			
				Standard Length 'A' = 53.3mm (2.098")		Extended Length 'A' = 104.1mm (4.098")	
MIN		MAX		THRO-HOLE	BOTTOMING	THRO-HOLE	BOTTOMING
mm	Inches	mm	Inches	(No Helix)	(No Helix)	(No Helix)	(No Helix)
5,95	.234	6,50	.256	SRMR 6	SRMB 6	SRMR 6 + 50	SRMB 6 + 50
6,45	.254	7,00	.276	SRMR 6,50	SRMB 6,50	SRMR 6,50 + 50	SRMB 6,50 + 50
6,95	.274	7,50	.295	SRMR 7	SRMB 7	SRMR 7 + 50	SRMB 7 + 50
7,45	.293	8,00	.315	SRMR 7,50	SRMB 7,50	SRMR 7,50 + 50	SRMB 7,50 + 50
7,95	.313	8,50	.335	SRMR 8	SRMB 8	SRMR 8 + 50	SRMB 8 + 50
8,45	.333	9,00	.354	SRMR 8,50	SRMB 8,50	SRMR 8,50 + 50	SRMB 8,50 + 50
8,95	.352	9,50	.374	SRMR 9	SRMB 9	SRMR 9 + 50	SRMB 9 + 50
9,45	.372	10,00	.394	SRMR 9,50	SRMB 9,50	SRMR 9,50 + 50	SRMB 9,50 + 50
9,95	.392	10,50	.413	SRMR 10	SRMB 10	SRMR 10 + 50	SRMB 10 + 50
10,45	.411	11,00	.433	SRMR 10,50	SRMB 10,50	SRMR 10,50 + 50	SRMB 10,50 + 50

Optional Self-Feeding 1 1/2° Helix Style Tools are Available for all Sizes, Styles and Lengths in this Range.

DIAMETER RANGE				TOOL NUMBER					
				Standard Length 'A' = 66.3mm (2.610")		Extended Length 'A' = 117.1mm (4.610")		Extra Length 'A' = 167.9mm (6.610")	
MIN		MAX		THRO-HOLE	BOTTOMING	THRO-HOLE	BOTTOMING	THRO-HOLE	BOTTOMING
mm	Inches	mm	Inches	(No Helix)	(No Helix)	(No Helix)	(No Helix)	(No Helix)	(No Helix)
10,95	.431	11,50	.453	SRMR 11	SRMB 11	SRMR 11 + 50	SRMB 11 + 50	SRMR 11 + 100	SRMB 11 + 100
11,45	.451	12,00	.472	SRMR 11,50	SRMB 11,50	SRMR 11,50 + 50	SRMB 11,50 + 50	SRMR 11,50 +100	SRMB 11,50 + 100
11,95	.470	12,50	.492	SRMR12	SRMB 12	SRMR 12 + 50	SRMB 12 + 50	SRMR 12 + 100	SRMB 12 + 100
12,45	.490	13,00	.512	SRMR 12,50	SRMB 12,50	SRMR 12,50 + 50	SRMB 12,50 + 50	SRMR 12,50 +100	SRMB 12,50 + 100

Optional Self-Feeding 1 1/2° Helix Style Tools are Available for all Sizes, Styles and Lengths in this Range

When ordering Blind Bore Tools please state actual size to be burnished.
Tools other than shown above are available upon request.

Standard tool specifications

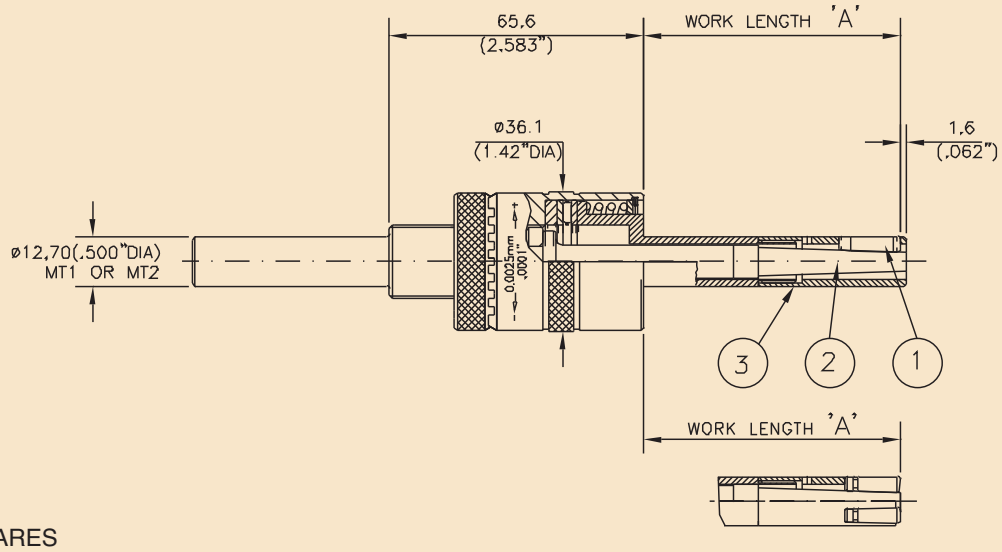

'SRMB' SERIES

MAIN SPARES
1. ROLLS (5/TOOL)
2. MANDREL CONE
3. CAGE

SRMR/SRMB SERIES ROLL-A-FINISH® TOOLS 13,0 to 24,0mm (.512" to .945")

DIAMETER RANGE				TOOL NUMBER					
				Standard Length 'A' = 66.3mm (2.610")		Extended Length 'A' = 117.1mm (4.610")		Extra Length 'A' = 167.9mm (6.610")	
MIN		MAX		THRO-HOLE (No Helix)	BOTTOMING (No Helix)	THRO-HOLE (No Helix)	BOTTOMING (No Helix)	THRO-HOLE (No Helix)	BOTTOMING (No Helix)
mm	Inches	mm	Inches						
12,90	.508	14,00	.551	SRMR 13	SRMB 13	SRMR 13 + 50	SRMB 13 + 50	SRMR 13 + 100	SRMB 13 + 100
13,90	.547	15,00	.591	SRMR 14	SRMB 14	SRMR 14 + 50	SRMB 14 + 50	SRMR 14 + 100	SRMB 14 + 100
14,90	.587	16,00	.630	SRMR 15	SRMB 15	SRMR 15 + 50	SRMB 15 + 50	SRMR 15 + 100	SRMB 15 + 100
15,90	.626	17,00	.669	SRMR 16	SRMB 16	SRMR 16 + 50	SRMB 16 + 50	SRMR 16 + 100	SRMB 16 + 100
16,90	.665	18,00	.709	SRMR 17	SRMB 17	SRMR 17 + 50	SRMB 17 + 50	SRMR 17 + 100	SRMB 17 + 100
17,90	.705	19,00	.748	SRMR 18	SRMB 18	SRMR 18 + 50	SRMB 18 + 50	SRMR 18 + 100	SRMB 18 + 100
18,90	.744	20,00	.787	SRMR 19	SRMB 19	SRMR 19 + 50	SRMB 19 + 50	SRMR 19 + 100	SRMB 19 + 100
19,90	.783	21,00	.827	SRMR 20	SRMB 20	SRMR 20 + 50	SRMB 20 + 50	SRMR 20 + 100	SRMB 20 + 100
20,90	.823	22,00	.866	SRMR 21	SRMB 21	SRMR 21 + 50	SRMB 21 + 50	SRMR 21 + 100	SRMB 21 + 100
21,90	.862	23,00	.906	SRMR 22	SRMB 22	SRMR 22 + 50	SRMB 22 + 50	SRMR 22 + 100	SRMB 22 + 100
22,90	.902	24,00	.945	SRMR23	SRMB 23	SRMR 23 + 50	SRMB 23 + 50	SRMR 23 + 100	SRMB 23 + 100
23,90	.941	25,00	.984	SRMR 24	SRMB 24	SRMR 24 + 50	SRMB 24 + 50	SRMR 24 + 100	SRMB 24 + 100
Optional Self-Feeding 1 1/2° Helix Style Tools are Available for all Sizes, Styles and Lengths in this Range									

When ordering Blind Bore Tools please state actual size to be burnished.
Tools other than shown above are available upon request.

Standard tool specifications

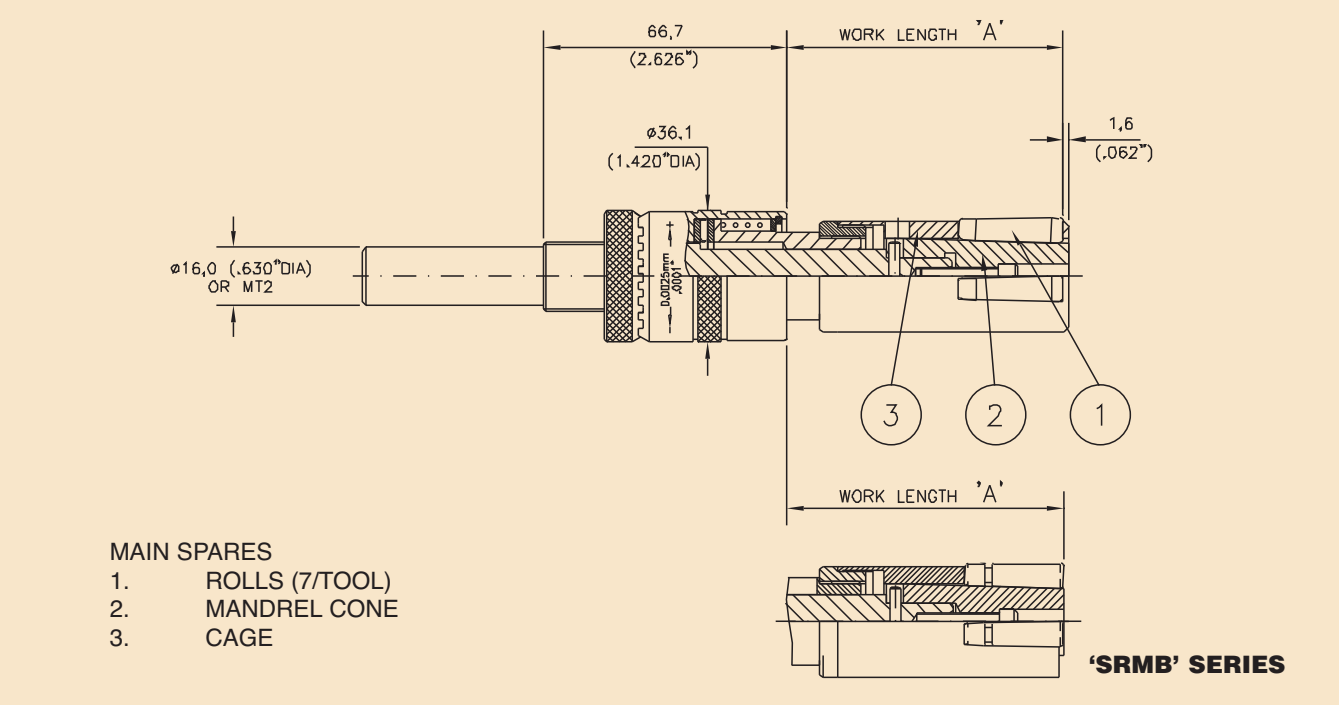

SRMR/SRMB SERIES ROLL-A-FINISH® TOOLS 25,0 to 50,0mm (.984" to 1.969")

DIAMETER RANGE				TOOL NUMBER					
				Standard Length 'A' = 75,7mm (2.980")		Extended Length 'A' = 126,5mm (4.980")		Extra Length 'A' = 177,3mm (6.980")	
MIN		MAX		THRO-HOLE	BOTTOMING	THRO-HOLE	BOTTOMING	THRO-HOLE	BOTTOMING
mm	Inches	mm	Inches	(No Helix)	(No Helix)	(No Helix)	(No Helix)	(No Helix)	(No Helix)
24,90	.980	26,00	1.024	SRMR 25	SRMB 25	SRMR 25 + 50	SRMB 25 + 50	SRMR 25 + 100	SRMB 25 + 100
25,90	1.020	27,00	1.063	SRMR 26	SRMB 26	SRMR 26 + 50	SRMB 26 + 50	SRMR 26 + 100	SRMB 26 + 100
26,90	1.059	28,00	1.102	SRMR 27	SRMB 27	SRMR 27 + 50	SRMB 27 + 50	SRMR 27 + 100	SRMB 27 + 100
27,90	1.098	29,00	1.142	SRMR 28	SRMB 28	SRMR 28 + 50	SRMB 28 + 50	SRMR 28 + 100	SRMB 28 + 100
28,90	1.138	30,00	1.181	SRMR 29	SRMB 29	SRMR 29 + 50	SRMB 29 + 50	SRMR 29 + 100	SRMB 29 + 100
29,90	1.177	31,00	1.220	SRMR 30	SRMB 30	SRMR 30 + 50	SRMB 30 + 50	SRMR 30 + 100	SRMB 30 + 100
30,90	1.217	32,00	1.260	SRMR 31	SRMB 31	SRMR 31 + 50	SRMB 31 + 50	SRMR 31 + 100	SRMB 31 + 100
31,90	1.256	33,00	1.300	SRMR 32	SRMB 32	SRMR 32 + 50	SRMB 32 + 50	SRMR 32 + 100	SRMB 32 + 100
32,90	1.295	34,00	1.339	SRMR 33	SRMB 33	SRMR 33 + 50	SRMB 33 + 50	SRMR 33 + 100	SRMB 33 + 100
33,90	1.335	35,00	1.378	SRMR 34	SRMB 34	SRMR 34 + 50	SRMB 34 + 50	SRMR 34 + 100	SRMB 34 + 100
34,90	1.374	36,00	1.417	SRMR 35	SRMB 35	SRMR 35 + 50	SRMB 35 + 50	SRMR 35 + 100	SRMB 35 + 100
35,90	1.413	37,00	1.457	SRMR 36	SRMB 36	SRMR 36 + 50	SRMB 36 + 50	SRMR 36 + 100	SRMB 36 + 100
36,90	1.453	38,00	1.496	SRMR 37	SRMB 37				
37,90	1.492	39,00	1.535	SRMR 38	SRMB 38				
38,90	1.531	40,00	1.574	SRMR 39	SRMB 39				
39,90	1.571	41,00	1.614	SRMR 40	SRMB 40				
40,90	1.610	42,00	1.654	SRMR 41	SRMB 41				
41,90	1.649	43,00	1.693	SRMR 42	SRMB 42				
42,90	1.689	44,00	1.732	SRMR 43	SRMB 43				
43,90	1.728	45,00	1.772	SRMR 44	SRMB 44				
44,90	1.768	46,00	1.811	SRMR 45	SRMB 45				
45,90	1.807	47,00	1.850	SRMR 46	SRMB 46				
46,90	1.846	48,00	1.890	SRMR 47	SRMB 47				
47,90	1.886	49,00	1.929	SRMR 48	SRMB 48				
48,90	1.925	50,00	1.968	SRMR 49	SRMB 49				
49,90	1.964	51,00	2.008	SRMR 50	SRMB 50				

ON COMPONENT BORES MORE THAN 36MM, INFINITE LENGTHS CAN BE BURNISHED BY ADDING SHANK ADAPTORS

Optional Self-Feeding $1^1/_2$° Helix Style Tools are Available for all Sizes, Styles and Lengths in this Range

When ordering Blind Bore Tools please state actual size to be burnished.
Tools other than shown above are available upon request.

Standard tool specifications

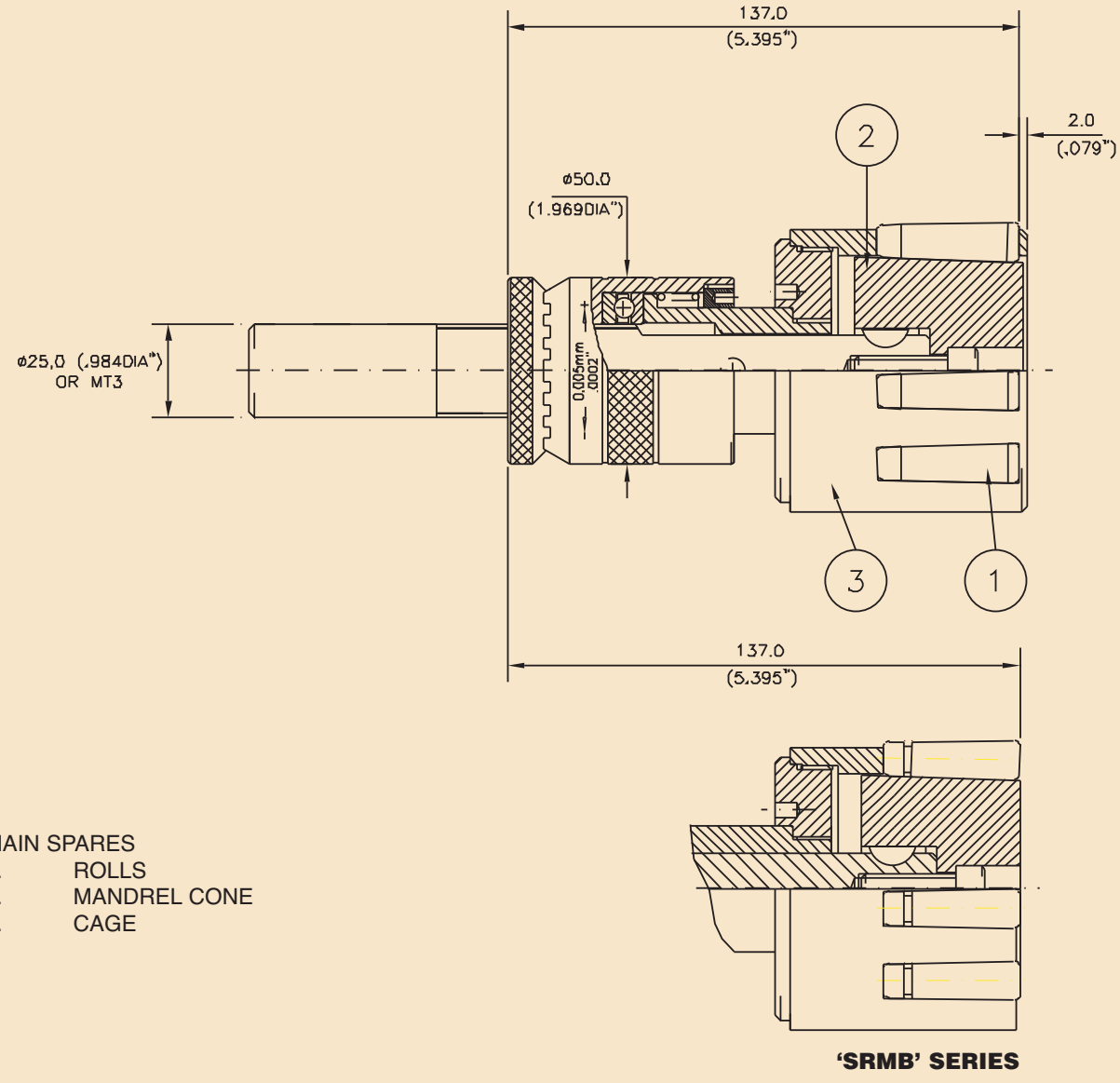

MAIN SPARES
1. ROLLS
2. MANDREL CONE
3. CAGE

SRMR/SRMB SERIES ROLL-A-FINISH® TOOLS 51,0 to 89,0mm (2.008" to 3.504")

SEE NEXT PAGE FOR CHART

When ordering Blind Bore Tools please state actual size to be burnished.
Tools other than shown above are available upon request.

Standard tool specifications

SRMR/SRMB SERIES ROLL-A-FINISH® TOOLS 51,0 to 89,0mm (2.008” to 3.504”)

DIAMETER RANGE				TOOL NUMBER	
				(UNLIMITED WORKING LENGTH USING SHANK EXTENSIONS)	
MIN		MAX		THRO-HOLE	BOTTOMING
mm	Inches	mm	Inches	(No Helix)	(No Helix)
50,90	2.004	52,00	2.047	SRMR 51	SRMB 51
51,90	2.043	53,00	2.087	SRMR 52	SRMB 52
52,90	2.083	54,00	2.126	SRMR 53	SRMB 53
53,90	2.122	55,00	2.165	SRMR 54	SRMB 54
54,90	2.161	56,00	2.205	SRMR 55	SRMB 55
55,90	2.201	57,00	2.244	SRMR 56	SRMB 56
56,90	2.240	58,00	2.283	SRMR 57	SRMB 57
57,90	2.280	59,00	2.323	SRMR 58	SRMB 58
58,90	2.319	60,00	2.362	SRMR 59	SRMB 59
59,90	2.358	61,00	2.402	SRMR 60	SRMB 60
60,90	2.398	62,00	2.441	SRMR 61	SRMB 61
61,90	2.437	63,00	2.480	SRMR 62	SRMB 62
62,90	2.476	64,00	2.520	SRMR 63	SRMB 63
63,90	2.516	65,00	2.559	SRMR 64	SRMB 64
64,90	2.555	66,00	2.598	SRMR 65	SRMB 65
65,90	2.594	67,00	2.638	SRMR 66	SRMB 66
66,90	2.634	68,00	2.677	SRMR 67	SRMB 67
67,90	2.673	69,00	2.717	SRMR 68	SRMB 68
68,90	2.713	70,00	2.756	SRMR 69	SRMB 69
69,90	2.752	71,00	2.795	SRMR 70	SRMB 70
70,90	2.791	72,00	2.835	SRMR 71	SRMB 71
71,90	2.831	73,00	2.874	SRMR 72	SRMB 72
72,90	2.870	74,00	2.913	SRMR 73	SRMB 73
73,90	2.909	75,00	2.953	SRMR 74	SRMR 74
74,90	2.949	76,00	2.992	SRMR 75	SRMB 75
75,90	2.988	77,00	3.031	SRMR 76	SRMB 76
76,90	3.028	78,00	3.071	SRMR 77	SRMB 77
77,90	3.067	79,00	3.110	SRMR 78	SRMB 78
78,90	3.106	80,00	3.150	SRMR 79	SRMB 79
79,90	3.146	81,00	3.189	SRMR 80	SRMB 80
80,90	3.185	82,00	3.228	SRMR 81	SRMB 81
81,90	3.224	83,00	3.268	SRMR 82	SRMB 82
82,90	3.264	84,00	3.307	SRMR 83	SRMB 83
83,90	3.303	85,00	3.346	SRMR 84	SRMB 84
84,90	3.343	86,00	3.386	SRMR 85	SRMB 85
85,90	3.382	87,00	3.425	SRMR 86	SRMB 86
86,90	3.421	88,00	3.465	SRMR 87	SRMB 87
87,90	3.461	89,00	3.504	SRMR 88	SRMB 88
88,90	3.500	90,00	3.543	SRMR 89	SRMB 89

Optional Self-Feeding $1^1/_2$° Helix Style Tools are Available for all Sizes and Styles in this Range

Standard tool specifications

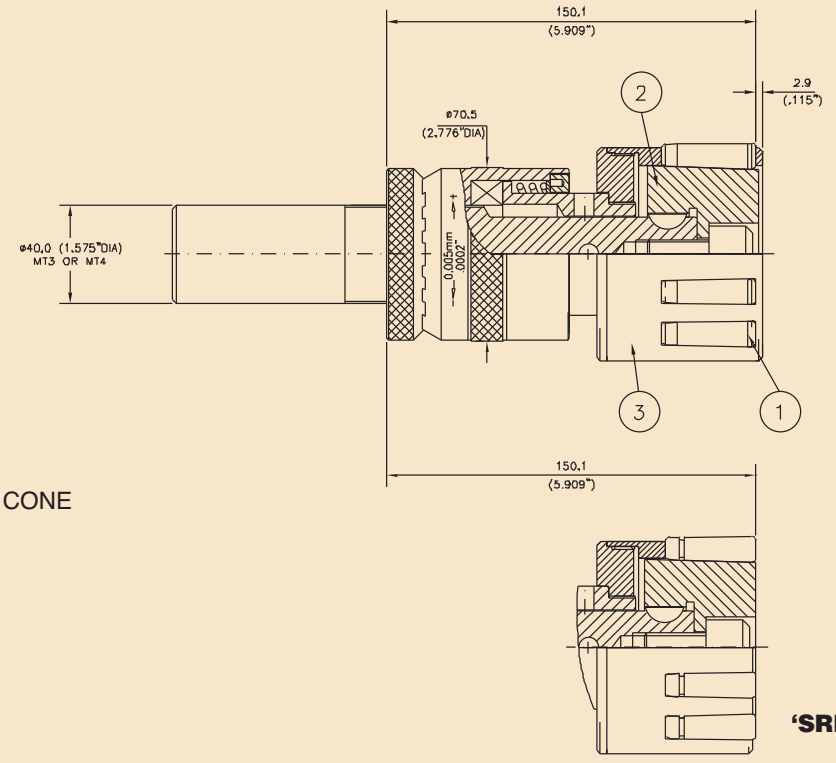

MAIN SPARES
1. ROLLS
2. MANDREL CONE
3. CAGE

'SRMB' SERIES

SRMR/SRMB SERIES ROLL-A-FINISH® TOOLS 90,0 to 177,0 mm (3.543" to 6.969")

DIAMETER RANGE				TOOL NUMBER (UNLIMITED WORKING LENGTH USING SHANK EXTENSIONS)	
MIN		MAX		THRO-HOLE	BOTTOMING
mm	Inches	mm	Inches	(No Helix)	(No Helix)
89,90	3.539	91,00	3.583	SRMR 90	SRMB 90
90,90	3.579	92,00	3.622	SRMR 91	SRMB 91
91,90	3.618	93,00	3.661	SRMR 92	SRMB 92
92,90	3.657	94,00	3.701	SRMR 93	SRMB 93
93,90	3.697	95,00	3.740	SRMR 94	SRMB 94
94,90	3.736	96,00	3.780	SRMR 95	SRMB 95
95,90	3.776	97,00	3.819	SRMR 96	SRMB 96
96,90	3.815	98,00	3.858	SRMR 97	SRMB 97
97,90	3.854	99,00	3.898	SRMR 98	SRMB 98
98,90	3.894	100,00	3.937	SRMR 99	SRMB 99
99,90	3.933	101,00	3.976	SRMR 100	SRMB 100
100,90	3.972	102,00	4.016	SRMR 101	SRMB 101
101,90	4.012	103,00	4.055	SRMR 102	SRMB 102
102,90	4.052	104,00	4.094	SRMR 103	SRMB 103
103,90	4.091	105,00	4.134	SRMR 104	SRMB 104
104,90	4.130	106,00	4.173	SRMR 105	SRMB 105
105,90	4.169	107,00	4.213	SRMR 106	SRMB 106
106,90	4.209	108,00	4.252	SRMR 107	SRMB 107
107,90	4.248	109,00	4.291	SRMR 108	SRMB 108
108,90	4.287	110,00	4.331	SRMR 109	SRMB 109
109,90	4.327	111,00	4.370	SRMR 110	SRMB 110
110,90	4.366	112,00	4.409	SRMR 111	SRMB 111
111,90	4.406	113,00	4.449	SRMR 112	SRMB 112
112,90	4.445	114,00	4.488	SRMR 113	SRMB 113

Optional Self-Feeding 1½° Helix Style Tools are Available for all Sizes and Styles in this Range

When ordering Blind Bore Tools please state actual size to be burnished.
Tools other than shown above are available upon request.

DIAMETER RANGE				TOOL NUMBER (UNLIMITED WORKING LENGTH USING SHANK EXTENSIONS)	
MIN		MAX		THRO-HOLE	BOTTOMING
mm	Inches	mm	Inches	(No Helix)	(No Helix)
113,90	4.484	115,00	4.528	SRMR 114	SRMB 114
114,90	4.524	116,00	4.567	SRMR 115	SRMB 115
115,90	4.563	117,00	4.606	SRMR 116	SRMB 116
116,90	4.602	118,00	4.646	SRMR 117	SRMB 117
117,90	4.642	119,00	4.685	SRMR 118	SRMB 118
118,90	4.681	120,00	4.724	SRMR 119	SRMB 119
119,90	4.720	121,00	4.764	SRMR 120	SRMB 120
120,90	4.760	122,00	4.803	SRMR 121	SRMB 121
121,90	4.799	123,00	4.843	SRMR 122	SRMB 122
122,90	4.839	124,00	4.882	SRMR 123	SRMB 123
123,90	4.878	125,00	4.921	SRMR 124	SRMB 124
124,90	4.917	126,00	4.961	SRMR 125	SRMB 125
125,90	4.957	127,00	5.000	SRMR 126	SRMB 126
126,90	4.996	128,00	5.039	SRMR 127	SRMB 127
127,90	5.035	129,00	5.079	SRMR 128	SRMB 128
128,90	5.075	130,00	5.118	SRMR 129	SRMB 129
129,90	5.114	131,00	5.157	SRMR 130	SRMB 130
130,90	5.154	132,00	5.197	SRMR 131	SRMB 131
131,90	5.193	133,00	5.236	SRMR 132	SRMB 132
132,90	5.232	134,00	5.276	SRMR 133	SRMB 133
133,90	5.272	135,00	5.315	SRMR 134	SRMB 134
134,90	5.311	136,00	5.354	SRMR 135	SRMB 135
135,90	5.350	137,00	5.394	SRMR 136	SRMB 136
136,90	5.390	138,00	5.433	SRMR 137	SRMB 137
137,90	5.429	139,00	5.472	SRMR 138	SRMB 138
138,90	5.469	140,00	5.512	SRMR 139	SRMB 139
139,90	5.508	141,00	5.551	SRMR 140	SRMB 140
140,90	5.547	142,00	5.591	SRMR 141	SRMB 141
141,90	5.587	143,00	5.630	SRMR 142	SRMB 142
142,90	5.626	144,00	5.669	SRMR 143	SRMB 143
143,90	5.665	145,00	5.709	SRMR 144	SRMB 144
144,90	5.705	146,00	5.748	SRMR 145	SRMB 145
145,90	5.744	147,00	5.787	SRMR 146	SRMB 146
146,90	5.783	148,00	5.827	SRMR 147	SRMB 147
147,90	5.823	149,00	5.866	SRMR 148	SRMB 148
148,90	5.862	150,00	5.906	SRMR 149	SRMB 149
149,90	5.902	151,00	5.945	SRMR 150	SRMB 150
150,90	5.941	152,00	5.984	SRMR 151	SRMB 151
151,90	5.980	153,00	6.024	SRMR 152	SRMB 152
152,90	6.020	154,00	6.063	SRMR 153	SRMB 153
153,90	6.059	155,00	6.102	SRMR 154	SRMB 154
154,90	6.098	156,00	6.142	SRMR 155	SRMB 155
155,90	6.138	157,00	6.181	SRMR 156	SRMB 156
156,90	6.177	158,00	6.220	SRMR 157	SRMB 157
157,90	6.217	159,00	6.260	SRMR 158	SRMB 158
158,90	6.256	160,00	6.299	SRMR 159	SRMB 159
159,90	6.295	161,00	6.339	SRMR 160	SRMB 160
160,90	6.335	162,00	6.378	SRMR 161	SRMB 161
161,90	6.374	163,00	6.417	SRMR 162	SRMB 162
162,90	6.413	164,00	6.457	SRMR 163	SRMB 163
163,90	6.453	165,00	6.496	SRMR 164	SRMB 164
164,90	6.492	166,00	6.535	SRMR 165	SRMB 165
165,90	6.531	167,00	6.575	SRMR 166	SRMB 166
166,90	6.571	168,00	6.614	SRMR 167	SRMB 167
167,90	6.610	169,00	6.654	SRMR 168	SRMB 168
168,90	6.650	170,00	6.693	SRMR 169	SRMB 169
169,90	6.690	171,00	6.732	SRMR 170	SRMB 170
170,90	6.728	172,00	6.772	SRMR 171	SRMB 171
171,90	6.768	173,00	6.811	SRMR 172	SRMB 172
172,90	6.807	174,00	6.850	SRMR 173	SRMB 173
173,90	6.846	175,00	6.890	SRMR 174	SRMB 174
174,90	6.886	176,00	6.929	SRMR 175	SRMB 175
175,90	6.925	177,00	6.969	SRMR 176	SRMB 176
176,90	6.965	178,00	7.008	SRMR 177	SRMB 177

Optional Self-Feeding $1^1/_2$° Helix Style Tools are Available for all Sizes and Styles in this Range

ROLLS

INTERNAL ROLLER BURNISHING ROLL CHART			
TOOL NUMBER	ROLL NUMBER		QTY / TOOL
(FROM - TO)	THRO-HOLE	BOTTOMING	
SRM 4 - 4,75	RR137	-	3
SRM 5 - 5,75	SR187	-	3
SRMR 6 - 7,50	R250	B250	5
SRMR 8 - 9	R312	B312	5
SRMR 9,50 - 10,50	R375	B375	5
SRMR 11 - 12,50	R437	B437	5
SRMR 13 - 17	R500	B500	5
SRMR 18 - 24	R750	B750	5
SRMR 25 - 29	R750	B750	7
SRMR 30 - 35	R875	B875	7
SRMR 36 - 41	R1125	B1125	7
SRMR 42 - 50	R1625	B1625	7
SRMR 51 - 69	R1625	B1625	9
SRMR 70 - 89	R1625	B1625	11
SRMR 90 - 110	R1625	B1625	13
SRMR 111 - 135	R1625	B1625	15
SRMR 136 - 155	R1625	B1625	17
SRMR 156 - 177	R1625	B1625	19

Bearingizing tools

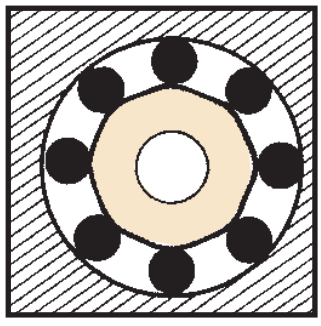

The Bearingizing Tool combines roller burnishing with peening action. As the tool is rotated at a high speed the rolls spin, rise, and fall over a cammed arbor, delivering up to 200,000 rapid fire blows per minute to the work surface. The peaks and valleys of the machined surface are compacted into a smooth, hardened, and ultrafine surface finish.

The Bearingizer *may* be the tool of choice where the following conditions exist:

- Parts with *thin walls* — Bearingizing eliminates barrel-shaping of the part.
- Parts with *irregular wall thicknesses* — the Bearingizing tool will produce a very round hole, whereas the Roll-a-Finish® tool might generate a slightly egg-shaped hole, due to variations in wall thickness.
- Applications where *porosity* is an issue (e.g., oil-impregnated bearings) — the smaller "footprint" of the Bearingizing roll leaves pores in the surface intact.
- Applications where *very tight tolerances* must be held — the Bearingizer reduces springback in the work surface material. The Bearingizing tool can, in some materials and with proper part preparation, hold size as close as ±.0001 inch (.002mm), while the Roll-a-Finish tool can achieve tolerances of ±.00025 inch (.006mm).

Where the above conditions do *not* exist, the Roll-a-Finish® tool would generally be the tool of choice, for two reasons:

(1) the relatively wide adjustment range of the Roll-a-Finish tool, which is typically .040 inch (1.01mm), and

(2) the ease of adjustment, with the castellated adjusting collar on the Roll-a-Finish tool.

The Bearingizing tool features a greater number of rolls, and rolls of a smaller diameter, as compared to the Roll-a-Finish tool, and can only be adjusted by change of rolls. The Bearingizer also requires a closer presize than the Roll-a-Finish tool.

But where the above conditions *do* exist, the Bearingizing tool should be considered.

While the Roll-a-Finish Tool increases surface hardness by about 5 to 10%, Bearingizing increases hardness by 10 to 30%, but with less surface penetration.

Tool specifications

Bearingizing tools provide three roll positions over the cammed arbor (see below). When the forward (#1 position) of cam becomes worn, the roll cage can be repositioned to the # 2 and # 3 positions by exchanging positions with the moveable collars. This presents NEW cam surfaces and original BUILD-UP. After all positions on the cam are worn beyond producing acceptable parts, oversize rolls can be used to further extend tool life. Roll sizes are available in increments of .0001 inch (.0025 mm) and the tool will accommodate a range of roll sizes up to .002 inch (.0508 mm).

For through-hole, semi-bottoming, or bottoming applications.

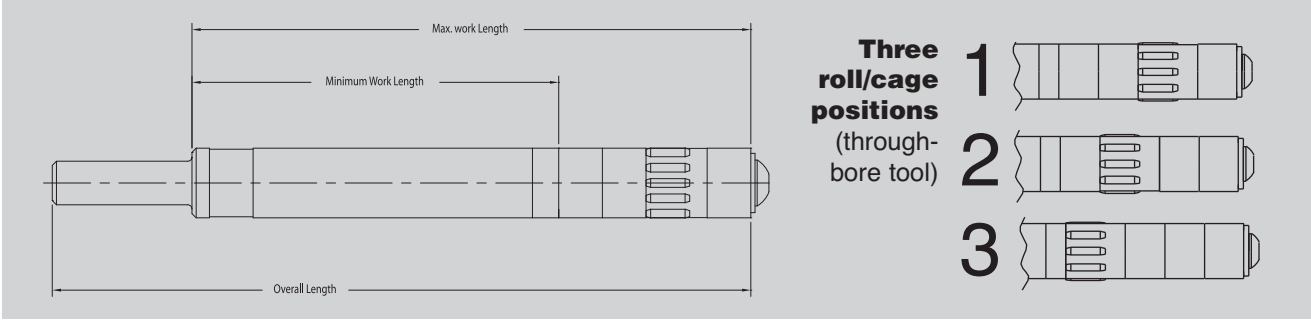

Bearingizing Tools .188 to 1.250 in. (4.76 to 31.75mm)

NOMINAL TOOL SIZE		BUILD-UP RANGE		CAM DIAMETER		SHANK	OVERALL LENGTH		WORK LENGTH				NO. OF ROLLS
									MAXIMUM		MINIMUM		
INCHES	MM	INCHES	MM	INCHES	MM		INCHES	MM	INCHES	MM	INCHES	MM	
.188	4.76	.1861 .1901	4.727 4.829	.1281	3.254		5.5	139.7	2.938	74.61	2.188	55.56	6
.219	5.56	.2174 .2214	5.522 5.624	.1594	4.049		5.5	139.7	2.938	74.61	2.188	55.56	6
.236	6	.2343 .2383	5.951 6.053	.1670	4.242		6	152.4	3.438	87.31	2.375	60.32	6
.250	6.35	.2486 .2526	6.314 6.416	.1806	4.587		6	152.4	3.438	87.31	2.375	60.32	6
.276	7	.2743 .2783	6.967 7.069	.2064	5.243		6	152.4	3.438	87.31	2.313	58.74	6
.281	7.14	.2799 .2839	7.109 7.211	.2119	5.382		6	152.4	3.438	87.31	2.313	58.74	6
.313	7.94	.3112 .3152	7.904 8.006	.2212	5.618		6	152.4	3.438	87.31	2.313	58.74	6
.315	8	.3137 .3177	7.968 8.069	.2238	5.667	.500 in. DIA.	6	152.4	3.438	87.31	2.313	58.74	6
.343	8.73	.3425 .3465	8.700 8.801	.2525	6.414	or	7	177.8	4.438	112.71	3.063	77.79	6
.354	9	.3530 .3570	8.966 9.068	.2631	6.683	12mm DIA.	7	177.8	4.438	112.71	3.063	77.79	6
.375	9.53	.3738 .3778	9.495 9.596	.2518	6.396		7	177.8	4.438	112.71	3.125	79.38	6
.394	10	.3965 .3925	9.970 10.071	.2705	6.871		7	177.8	4.438	112.71	3.125	79.38	6
.406	10.32	.4051 .4091	10.290 10.391	.2831	7.191		8	203.2	5.438	138.11	3.563	90.49	6
.433	11	.4320 .4360	10.973 11.074	.2779	7.059		8	203.2	5.438	138.11	3.688	93.66	6
.438	11.11	.4365 .4405	11.087 11.189	.2825	7.176		8	203.2	5.438	138.11	3.688	93.66	6
.469	11.91	.4678 .4718	11.882 11.984	.3138	7.971		8	203.2	5.438	138.11	3.688	93.66	8
.472	12	.4710 .4750	11.963 12.065	.3174	8.062		8	203.2	5.438	138.11	3.688	93.66	8

Tool specifications

Bearingizing Tools .188 to 1.250 in. (4.76 to 31.75mm) *continued*

NOMINAL TOOL SIZE		BUILD-UP RANGE		CAM DIAMETER		SHANK	OVERALL LENGTH		WORK LENGTH				NO. OF ROLLS
									MAXIMUM		MINIMUM		
INCHES	MM	INCHES	MM	INCHES	MM		INCHES	MM	INCHES	MM	INCHES	MM	
.500	12.70	.4990 .5030	12.675 12.776	.3450	8.763		8	203.2	5.438	138.11	3.688	93.66	8
.512	13	.5110 .5150	12.979 13.081	.3568	9.063	.500 in. DIA.	8	203.2	5.438	138.11	3.688	93.66	8
.531	13.49	.5303 .5343	13.470 13.571	.3763	9.558	or	8	203.2	5.438	138.11	3.688	93.66	8
.551	14	.5500 .5540	13.970 14.072	.3962	10.063	12mm DIA.	8	203.2	5.438	138.11	3.688	93.66	8
.563	14.29	.5615 .5655	14.262 14.364	.4075	10.351		8	203.2	5.438	138.11	3.688	93.66	8
.591	15	.5936 .5896	15.077 14.976	.4356	11.064		8	203.2	4.875	123.83	3.125	79.38	8
.594	15.09	.5928 .5968	15.057 15.159	.4388	11.146		8	203.2	4.875	123.83	3.125	79.38	8
.625	15.87	.6240 .6280	15.850 15.951	.4390	15.151		8	203.2	4.875	123.83	3.125	79.38	8
.630	16	.6290 .6330	15.977 16.078	.4439	11.275		8	203.2	4.875	123.83	3.125	79.38	8
.656	16.67	.6553 .6593	16.645 16.746	.4703	11.946		8	203.2	4.875	123.83	3.125	79.38	8
.669	17	.6680 .6720	16.967 17.069	.4833	12.276		8	203.2	4.875	123.83	3.125	79.38	8
.688	17.46	.6865 .6905	17.437 17.539	.5015	12.738		8	203.2	4.875	123.83	3.125	79.38	8
.709	18	.7080 .7120	17.983 18.085	.5227	13.277	.750 in. DIA.	8	203.2	4.875	123.83	3.125	79.38	10
.719	18.26	.7178 .7218	18.232 18.334	.5328	13.533	or	8	203.2	4.875	123.83	3.125	79.38	10
.748	19	.7470 .7510	18.974 19.075	.5620	14.275	20mm DIA.	8	203.2	4.875	123.83	3.125	79.38	10
.750	19.05	.7490 .7530	19.025 19.126	.5640	14.326		8	203.2	4.875	123.83	3.125	79.38	10
.781	19.84	.7803 .7843	19.820 19.921	.5953	15.121		8	203.2	4.875	123.83	3.125	79.38	10
.787	20	.7860 .7900	19.964 20.066	.6014	15.276		8	203.2	4.875	123.83	3.125	79.38	10
.813	20.64	.8115 .8155	20.612 20.714	.6265	15.913		8	203.2	4.875	123.83	3.125	79.38	10
.827	21	.8260 .8300	20.980 21.082	.6408	16.276		8	203.2	4.875	123.83	3.125	79.38	10
.844	21.43	.8428 .8468	21.407 21.509	.5958	15.133		9	228.60	5.875	149.23	3.75	95.25	10
.866	22	.8650 .8690	11.971 22.076	.6181	15.700		9	228.60	5.875	149.23	3.75	95.25	10
.875	22.22	8740 .8780	22.200 22.301	.6270	15.926		9	228.60	5.875	149.23	3.75	95.25	10
.905	23	.9050 .9090	22.987 23.087	.6583	16.721		10	254.00	6.125	155.58	4.00	101.60	10
.906	23.02	.9053 .9093	22.995 23.096	.6583	16.721		10	254.00	6.125	155.58	4.00	101.60	10
.938	23.81	.9365 .9405	23.787 23.889	.6895	17.513		10	254.00	6.125	155.58	4.00	101.60	10
.945	24	.9440 .9480	23.978 24.078	.6969	17.701	1.000 in. DIA.	10	254.00	6.125	155.58	4.00	101.60	10
.969	24.61	.9678 .9718	24.582 24.684	.7208	18.308	or	10	254.00	6.125	155.58	4.00	101.60	12
.984	25	.9830 .9870	24.968 25.070	.7363	18.702	25mm DIA.	10	254.00	6.125	155.58	4.00	101.60	12
1.000	25.40	.9990 1.0030	25.375 25.476	.7520	19.101		10	254.00	6.125	155.58	4.00	101.60	12
1.063	26.99	1.0615 1.0655	26.962 27.064	.8145	20.688		10	254.00	6.125	155.58	4.00	101.60	12
1.125	28.57	1.1240 1.1280	28.550 28.651	.8770	22.276		10	254.00	6.125	155.58	4.00	101.60	12
1.188	30.16	1.1865 1.1905	30.137 30.239	.9395	23.863		10	254.00	6.125	155.58	4.00	101.60	12
1.250	31.75	1.2490 1.2530	31.725 31.826	.9390	23.851		10	254.00	6.125	155.58	4.00	101.60	14

Shanks other than shown above are available upon request.

Selection & ordering information

To select a tool for the part and material to be Bearingized, determine the proper tool *build-up*. The build-up is the effective tool diameter required to produce a certain size in a given material. It is measured with the rolls diametrically opposed on the high surfaces of the cam.

The build-up is equal to the maximum finished hole diameter plus a spring-back allowance — see chart. The maximum diameter (high side of tolerance) is used to allow for tool wear and still maintain part size within tolerance limits.

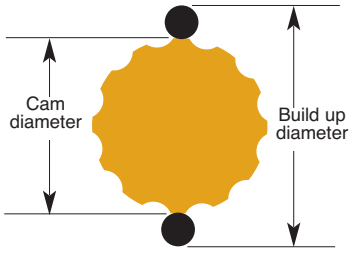

Nominal tool sizes

The program is based on nominal diameters of .188 inch (4.76mm) through 1.250 inch (31.75mm). Each tool provides a build-up range of .004 inch (.1016mm). The required build-up must be within the range of the tool size shown — otherwise select an intermediate tool. See ordering information at right.

EXAMPLE

Stainless Steel part .5010/5008 inch (12.725/12.720mm) tolerance	.5010
Add Stainless Steel spring-back allowance	+.0010
Build-up	.5020

Since a .5020 inch (12.75mm) build-up falls within a range of .4990-.5030 inch (12.67-12.78mm), order a nominal .500 inch (12.7mm) through-hole Bearingizing tool and rolls . . . or order through-hole Bearingizing tool with .5020 inch (12.75mm) build-up — Cogsdill will furnish proper tool and rolls.

Roll Sizes

To determine the roll size for a standard tool, subtract the cam diameter from the build-up and divide by two (2). This establishes the single roll diameter.

EXAMPLE

Build-up required for part	.5020 inch (12.75mm)
Subtract cam diameter of .500 inch (12.75mm) tool	–.3450 inch (8.76mm)
	.1570 inch (3.99mm)
Divided by 2	.1570 inch ÷2 =.0785 inch (1.99mm)
Single roll size	.0785 inch (1.99mm)

Order .500 inch (12.7mm) Bearingizing tool with .0785 inch (1.99mm) rolls.

Spring-Back Allowances	.188 to .500 (4.76 to 12.7 mm)		.500 & up (12.7 mm & up)	
	IN.	mm	IN.	mm
Stainless	.0008	.0203	.001	.0254
Steel	.0008	.0203	.001	.0254
Cast Iron	.0005	.0127	.0008	.0203
Sintered Iron	.0005	.0127	.0008	.0203
Aluminum	.0002	.0050	.0004	.0102
Brass	.0005	.0127	.0008	.0203
Sintered Bronze	.0001	.0025	.0002	.0051
Oilite	.0001	.0025	.0002	.0051

Note: Above are recommended starting points only. Final build-up can best be determined by actual trial and several extra sets of rolls in increments of .0001 inch (.0025mm) are recommended.

Ordering nominal tool sizes

1 Specify tool size and roll diameter, or specify hole size and material.

2 Specify tool style: through-hole, semi-blind or blind-hole tool. Through-hole tools use chamfered rolls; semi-blind or blind-hole tools use radius rolls. Blind-hole tools have a special roll retainer which permits finishing within .025 inch (.635mm) of the bottom.

3 Extra sets of rolls in increments of .0001 inch (.0025mm) are recommended with initial orders to allow for final size adjustment and compensate for eventual tool wear.

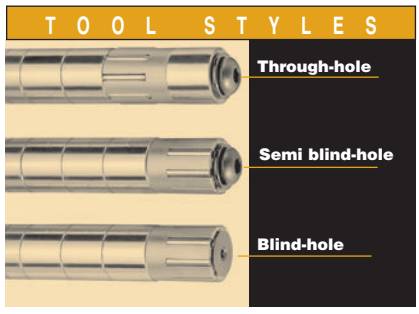

Ordering intermediate and larger tools

Intermediate sizes

Sizes that do not fall within the range of nominal tools are ordered by build-up only. Cogsdill will design tool and specify roll size.

Tools over 1.250 inch (31.75mm) in diameter

Order by build-up diameter. Cogsdill will design tool and specify roll size. We suggest that part print be furnished with inquiry. This will enable Cogsdill engineers to quote on any special features that may be desirable, such as extended front pilot, etc.

Re-ordering tools and parts

Re-order nominal size tools and parts by fractional tool size shown on shank–except roll sizes, which should be determined by the required build-up. Re-order intermediate and larger size tools and parts, including rolls by BT number shown on shank. If cams are worn, larger rolls may be required (available in increments of .0001 inch (.0025mm). Cogsdill will also re-grind cams and supply rolls to maintain original build-up.

Operation & maintenance

Machines

Any machine capable of rotating the tool — e.g. drill press, speed lathe, or turret lathe — may be used.

Material

Any ductile or malleable material — powdered, laminated, cast, forged, extruded, sintered or hardened (maximum Rc 38) can be bearingized. Steel, stainless, alloy, cast iron, aluminum, copper and brass are examples.

Procedure

Proper part preparation is essential in order to obtain precise results. Cogsdill will recommend the surface preparation and amount of stock to leave for Bearingizing, but some trials may be required to determine these factors for optimum results.

Since the change in dimension is partly governed by the character of the prepared surface, usually coarser preparation will permit a greater change in dimension than is possible with finer preparation. The consistent pattern obtained from boring will produce the best finish.

The other major factor in dimensional change is the ability of the material to grain-flow without flaking. The total change may vary from .0001 inch (.0025mm) on harder materials to as much as .003 inch (.0762mm) on sintered self-lubricating bushings. Less than .001 inch (.0254mm) stock for Bearingizing generally provides a good starting point for trials.

Tool diameter changes

Bearingizing rolls are manufactured in increments of .0001 inch (.0025mm). Bearingizing Tools are adjustable by roll change only. One set of rolls can be removed and a new set of a different size installed, thus effectively changing the size of the tool — or compensating for tool wear. The working diameter of any tool can be changed over an approximate .004 inch (.1016mm) range by installing different sets of rolls. The rolls are diametrically opposed and available in .0001 inch (.0025mm) increments, therefore the effective tool diameter can be changed in .0002 inch (.0051mm) increments.

Lubrication

For most metals use any standard grade of lightweight, low viscosity lubricating oil, or any mineral, sulphur or soluble oil that is compatible with the alloy or metal to be burnished and is recommended for fine surface finishing.

For aluminum or magnesium alloys, use a highly refined oil-based coolant with low viscosity.

For cast iron a mineral seal or water soluble solution is ideal — flooding the part is recommended.

Cleaning

The Bearingizing tool should be cleaned periodically with a light-bodied oil of about 100 Saybolt universal scale, similar to a light spindle oil. A few drops applied with squirt can or brush to the rolls and cage (with cage stopped) will wash metal dust particles out when tool is operated, keeping the cam surfaces and roll pockets clean.

Speed and feed recommendations

HOLE DIAMETER		RPM	HOLE DIAMETER		RPM	HOLE DIAMETER		RPM	HOLE DIAMETER		RPM
INCHES	MM		INCHES	MM		INCHES	MM		INCHES	MM	
.188	4.762	8200	.750	19.050	2000	1.750	44.45	875	2.750	69.85	555
.250	6.350	6100	.875	22.225	1800	1.875	47.62	815	2.875	73.02	530
.312	7.937	4900	1.000	25.40	1500	2.000	50.80	765	3.000	76.20	510
.375	9.525	4100	1.125	28.57	1350	2.125	53.97	720	3.500	88.90	435
.437	11.112	3500	1.250	31.75	1200	2.250	57.15	680	4.000	101.60	380
.500	12.700	3100	1.375	34.92	1100	2.375	60.32	645	4.500	114.30	340
.562	14.287	2700	1.500	38.10	1000	2.500	63.50	610	5.000	127.00	305
.625	15.875	2400	1.625	41.27	950	2.625	66.67	580	5.500	139.70	280

FEED–Feed Rate in and out should be quite rapid, 150-250 inches per minute (3.81M–6.35M), rather than slow.
The speeds and feeds recommended are for best tool life.
The same results can be achieved at slower rate, but with some sacrifice of tool life.

External Roll-a-Finish® tools

XBB series

For burnishing the outside diameter of cylindrical parts, such as shafts rotating in bushings or bearings. Provides an ideal surface for grease and oil seals.

XBB 1,5-20,0

Available from stock for nominal diameters from 1,5 to 20,0 mm (.059 to .787 inches). Micro XBB tools and XBB tools larger than 20,0mm are available upon request.

Offered in *two styles:*

- **Micro XBB tools,** with a very small body diameter and short overall length, are designed for Swiss auto-style machines. The tools cover a range of nominal diameters from 1,00 to 9,00mm (.039 to .354 inch).
- **Regular XBB tools** are available for nominal sizes from 1,5 to 65,0mm (.059 to 2.559 inch).

All XBB tools are bottoming-style and require machine feeding. The tools are adjustable in increments of .002mm (.0001 inch).

XBB 21,0-40,0

Standard tool specifications

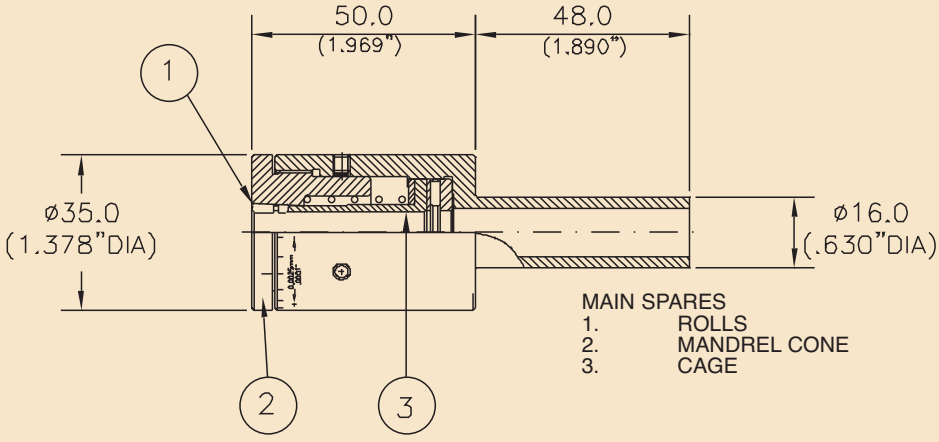

MICRO XBB SERIES ROLL-A-FINISH® TOOLS 1,00 to 9,00mm (.039" to .354")

DIAMETER RANGE				TOOL NUMBER
MIN		MAX		BOTTOMING
mm	Inches	mm	Inches	(No Helix)
0,75	.030	1,025	.040	MICRO 1,00
1,00	.039	1,275	.050	MICRO 1,25
1,25	.049	1,525	.060	MICRO 1,50
1,50	.059	1,775	.070	MICRO 1,75
1,75	.069	2,025	.080	MICRO 2,00
2,00	.079	2,275	.090	MICRO 2,25
2,25	.089	2,525	.099	MICRO 2,50
2,50	.098	2,775	.109	MICRO 2,75
2,75	.108	3,025	.119	MICRO 3,00
3,00	.118	3,275	.129	MICRO 3,25
3,25	.128	3,525	.139	MICRO 3,50
3,50	.138	3,775	.149	MICRO 3,75
3,75	.148	4,025	.158	MICRO 4,00
4,00	.158	4,275	.168	MICRO 4,25
4,25	.167	4,525	.178	MICRO 4,50
4,50	.177	4,775	.188	MICRO 4,75
4,75	.187	5,025	.198	MICRO 5,00
5,00	.197	5,275	.208	MICRO 5,25
5,25	.207	5.525	.218	MICRO 5,50
5,50	.217	5,775	.227	MICRO 5,75
5,75	.226	6,025	.237	MICRO 6,00
6,00	.236	6,275	.247	MICRO 6,25
6,25	.246	6,525	.257	MICRO 6,50
6,50	.256	6,775	.267	MICRO 6,75
6,75	.266	7,025	.277	MICRO 7,00
7,00	.276	7,275	.286	MICRO 7,25
7,25	.285	7,525	.296	MICRO 7,50
7,50	.295	7,775	.306	MICRO 7,75
7,75	.305	8,025	.316	MICRO 8,00
8,00	.315	8,275	.326	MICRO 8,25
8,25	.325	8,525	.336	MICRO 8,50
8,50	.335	8,775	.345	MICRO 8,75
8,75	.344	9,025	.355	MICRO 9,00

Standard tool specifications

STANDARD HOLLOW SHANK DESIGN

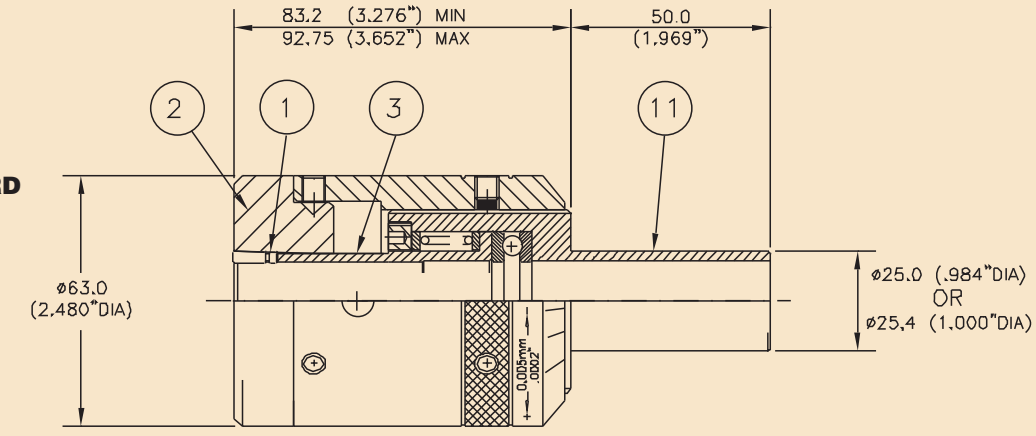

OPTIONAL SCREW-IN SHANK DESIGN

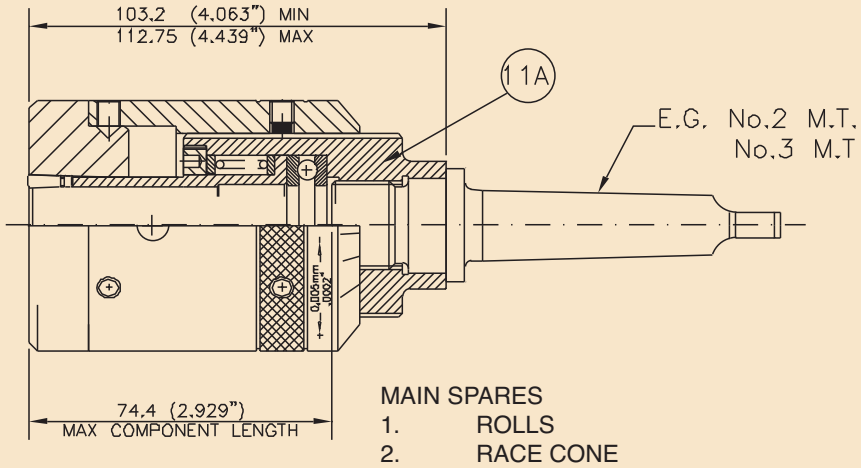

MAIN SPARES

1.	ROLLS
2.	RACE CONE
3.	CAGE
11.	STANDARD HOLLOW SHANK MANDREL
11A.	OPTIONAL SCREW-IN SHANK MANDREL

XBB SERIES ROLL-A-FINISH® TOOLS 1,5 to 20,0mm (.059" to .787")

SEE NEXT PAGE FOR CHART

Standard tool specifications

XBB SERIES ROLL-A-FINISH® TOOLS 1,5 to 20,0mm (.059" to .787")

DIAMETER RANGE				TOOL NUMBER
MIN		MAX		BOTTOMING
mm	Inches	mm	Inches	(No Helix)
1,00	.039	1,60	.063	XBB 1,5
1,50	.059	2,10	.083	XBB 2,0
2,00	.078	2,60	.102	XBB 2,5
2,50	.098	3,10	.122	XBB 3,0
3,00	.118	3,60	.142	XBB 3,5
3,50	.138	4,10	.161	XBB 4,0
4,00	.157	4,60	.181	XBB 4,5
4,50	.177	5,10	.201	XBB 5,0
5,00	.197	5,60	.220	XBB 5,5
5,50	.217	6,10	.240	XBB 6,0
6,00	.236	6,60	.260	XBB 6,5
6,50	.256	7,10	.280	XBB 7,0
7,00	.276	7,60	.299	XBB 7,5
7,50	.295	8,10	.319	XBB 8,0
8,00	.315	8,60	.339	XBB 8,5
8,50	.335	9,10	.358	XBB 9,0
9,00	.354	9,60	.378	XBB 9,5
9,50	.374	10,10	.398	XBB 10,0
10,00	.394	10,60	.417	XBB 10,5
10,50	.413	11,10	.437	XBB 11,0
11,00	.433	11,60	.457	XBB 11,5
11,50	.453	12,10	.476	XBB 12,0
12,00	.472	12,60	.496	XBB 12,5
12,50	.492	13,10	.516	XBB 13,0
13,00	.512	13,60	.535	XBB 13,5
13,50	.531	14,10	.555	XBB 14,0
14,00	.551	14,60	.575	XBB 14,5
14,50	.571	15,10	.594	XBB 15,0
15,00	.591	15,60	.614	XBB 15,5
15,50	.610	16,10	.634	XBB 16,0
16,00	.630	16,60	.654	XBB 16,5
16,50	.650	17,10	.673	XBB 17,0
17,00	.669	17,60	.693	XBB 17,5
17,50	.689	18,10	.713	XBB 18,0
18,00	.709	18,60	.732	XBB 18,5
18,50	.728	19,10	.752	XBB 19,0
19,00	.748	19,60	.772	XBB 19,5
19,50	.768	20,10	.791	XBB 20,0

Optional Self-Feeding 1 1/2° Helix Style Tools are Available from XBB 6,5 onwards

Standard tool specifications

STANDARD HOLLOW SHANK DESIGN

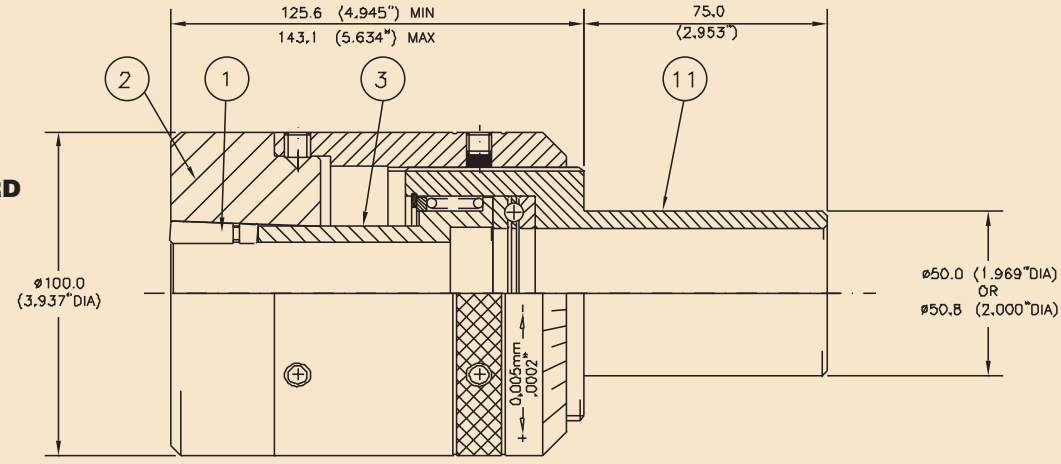

OPTIONAL SCREW-IN SHANK DESIGN

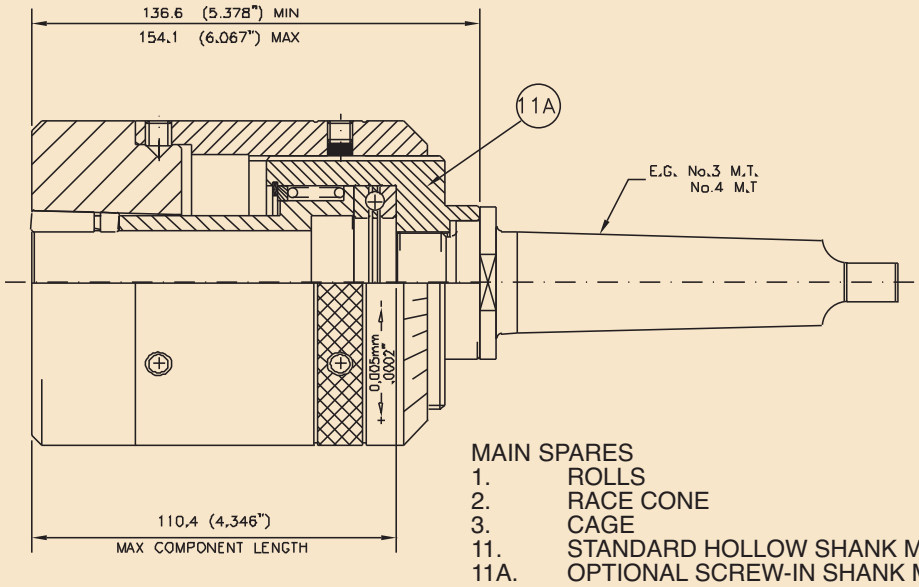

MAIN SPARES

1.	ROLLS
2.	RACE CONE
3.	CAGE
11.	STANDARD HOLLOW SHANK MANDREL
11A.	OPTIONAL SCREW-IN SHANK MANDREL

XBB SERIES ROLL-A-FINISH® TOOLS 21,0 to 40,0mm (.827" to 1.575")

SEE NEXT PAGE FOR CHART

XBB SERIES ROLL-A-FINISH® TOOLS 21,0 to 40,0mm (.827" to 1.575")

DIAMETER RANGE				TOOL NUMBER
MIN		MAX		BOTTOMING
mm	Inches	mm	Inches	(No Helix)
20,00	.787	21,10	.831	XBB 21
21,00	.827	22,10	.870	XBB 22
22,00	.866	23,10	.909	XBB 23
23,00	.906	24,10	.949	XBB 24
24,00	.945	25,10	.988	XBB 25
25,00	.984	26,10	1.028	XBB 26
26,00	1.024	27,10	1.067	XBB 27
27,00	1.063	28,10	1.106	XBB 28
28,00	1.102	29,10	1.146	XBB 29
29,00	1.142	30,10	1.185	XBB 30
30,00	1.181	31,10	1.224	XBB 31
31,00	1.220	32,10	1.264	XBB 32
32,00	1.260	33,10	1.303	XBB 33
33,00	1.299	34,10	1.343	XBB 34
34,00	1.339	35,10	1.382	XBB 35
35,00	1.378	36,10	1.421	XBB 36
36,00	1.417	37,10	1.461	XBB 37
37,00	1.457	38,10	1.500	XBB 38
38,00	1.496	39,10	1.539	XBB 39
39,00	1.535	40,10	1.579	XBB 40

Optional Self-Feeding 1 1/2° Helix Style Tools are Available for all Sizes in this Range

Standard tool specifications

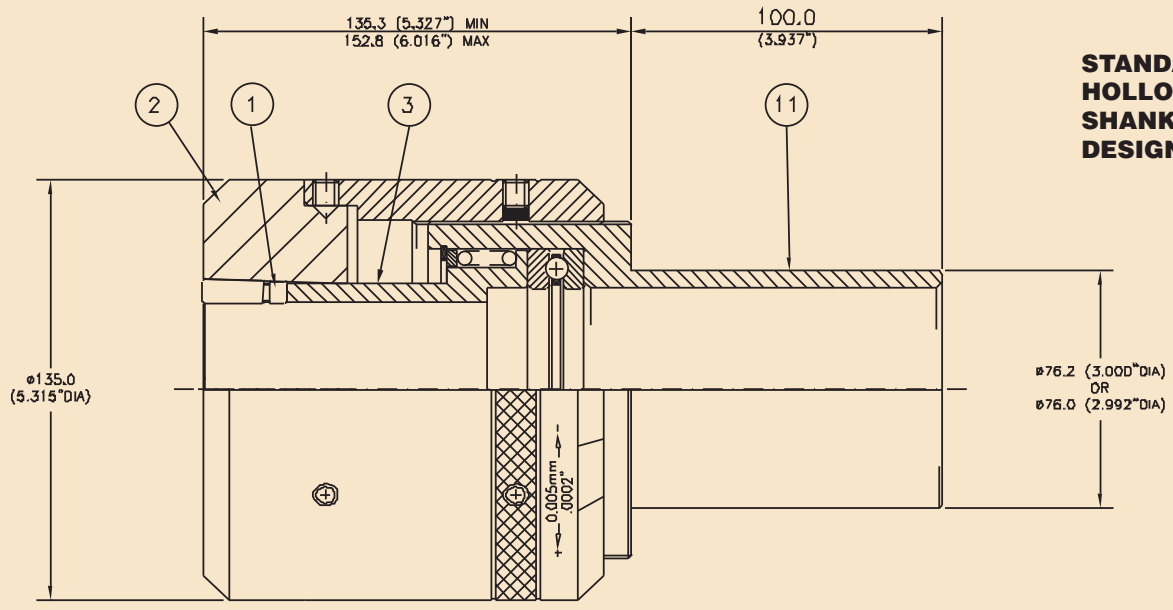

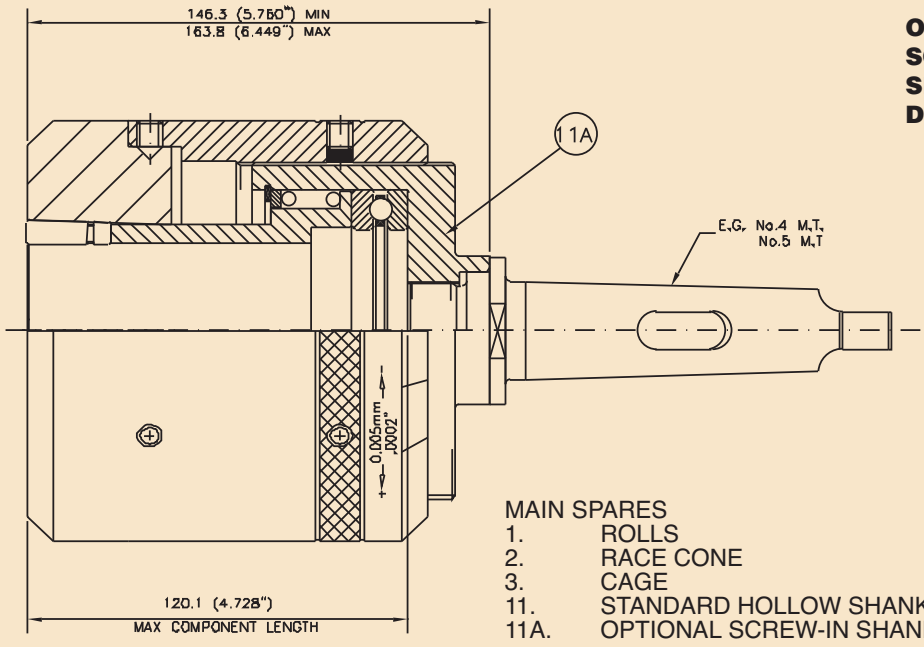

MAIN SPARES

1.	ROLLS
2.	RACE CONE
3.	CAGE
11.	STANDARD HOLLOW SHANK MANDREL
11A.	OPTIONAL SCREW-IN SHANK MANDREL

XBB SERIES ROLL-A-FINISH® TOOLS 41,0 to 65,0mm (1.614" to 2.559")

SEE NEXT PAGE FOR CHART

XBB SERIES ROLL-A-FINISH® TOOLS 41,0 to 65,0mm (1.614” to 2.559”)

DIAMETER RANGE				TOOL NUMBER
MIN		MAX		BOTTOMING (No Helix)
mm	Inches	mm	Inches	
40,00	1.575	41,10	1.618	XBB 41
41,00	1.614	42,10	1.657	XBB 42
42,00	1.654	43,10	1.697	XBB 43
43,00	1.693	44,10	1.736	XBB 44
44,00	1.732	45,10	1.776	XBB 45
45,00	1.772	46,10	1.815	XBB 46
46,00	1.811	47,10	1.854	XBB 47
47,00	1.850	48,10	1.894	XBB 48
48,00	1.890	49,10	1.933	XBB 49
49,00	1.929	50,10	1.972	XBB 50
50,00	1.969	51,10	2.012	XBB 51
51,00	2.008	52,10	2.051	XBB 52
52,00	2.047	53,10	2.091	XBB 53
53,00	2.087	54,10	2.130	XBB 54
54,00	2.126	55,10	2.169	XBB 55
55,00	2.165	56,10	2.209	XBB 56
56,00	2.205	57,10	2.248	XBB 57
57,00	2.244	58,10	2.287	XBB 58
58,00	2.283	59,10	2.327	XBB 59
59,00	2.323	60,10	2.366	XBB 60
60,00	2.362	61,10	2.406	XBB 61
61,00	2.402	62,10	2.445	XBB 62
62,00	2.441	63,10	2.484	XBB 63
63,00	2.480	64,10	2.524	XBB 64
64,00	2.520	65,10	2.563	XBB 65
Optional Self-Feeding $1^1/_2$° Helix Style Tools are Available for all Sizes in this Range				

ROLLS

EXTERNAL ROLLER BURNISHING ROLL CHART		
TOOL NUMBER (FROM - TO)	BOTTOMING	QTY / TOOL
MICRO XBB 1,00-5,50	B250	3
MICRO XBB 6,00-9,00	B250	5
XBB 1,50 - 5,50	B312	3
XBB 6,0 - 20	B438	5
XBB 21 - 40	B875	7
XBB 41 - 65	B1125	9

Selection & ordering information

Internal Roll-a-Finish® tools

Specify tool number. First select series SRMR or SRMB. If self-feeding cage is desired, add "helix." If a bottoming tool is desired add a "B". Next, indicate nominal tool size. *(Examples: SRMR 25; SRMB 25; SRMR 25 with helix).*

If extra work length is desired, designate by adding the suffix +50 or +100. *(Examples: SRMR 25+50, SRMR 25+100.)* If no work length is specified, we will supply the shortest work length, which is shown in the respective tool specifications for each series.

When ordering bottoming-style tools, please furnish part print or detailed sketch.

External Roll-a-Finish® tools

When ordering external Roll-a-Finish tools, specify tool number. *(Examples: XBB20,0; XBB40,0).*

For self feeding tools, please specify "with helix".

Replacement parts

For mandrel or race assemblies, specify tool number and description of part. *(Examples: XBB 25,0 mandrel assembly; XBB40,0 race assembly.)*

Order individual components by detail number (if known).

Order replacement rolls in complete sets. (NOTE: Mixing new and used rolls will reduce the effectiveness of the tool.) Specify detail number, description, and tool number. *(Example: Set of rolls for XBB 25,0.)*

NOTE: Use cage marking to establish nominal tool size.

Bearingizing tools

For tool selection and ordering information for Bearingizing tools and replacement parts, please refer to page 20.

to order

Part preparation & operating parameters for roller burnishing

Note

The following instructions are intended for use with standard Cogsdill Roll-a-Finish tools. If your tool is a special design, please refer to your tool drawing for special operating parameters.

Machines

Cogsdill Roll-a-Finish tools are extremely versatile. The tool can be used on any type of shop machinery, including lathes, drill presses, machining centers, or any rotating spindle. Standard tools are designed for right-hand rotation, with either tool or part rotating.

Material

Almost any metal, particularly any ductile or malleable metal, such as steel, stainless, alloy, cast iron, aluminum, copper, brass, bronze, etc., may be successfully roller burnished. Hardness should normally be less than 40 on the Rockwell "C" scale. (If hardness exceeds Rc 40 consult Cogsdill's Engineering Department.)

Part preparation

Proper part preparation is essential to obtain optimum results from roller burnishing. Due to the fact that no metal is removed in the process, finish depends upon the existence of a uniform and tearfree surface which will be caused to flow under the pressure exerted through the rolls. A 2-3 micrometers Ra surface (80-120 microinch), which is typical of boring or turning, is considered an ideal surface for roller burnishing. This relatively rough prefinish allows the Roll-a-Finish tool to displace a greater amount of material on the surface of the workpiece. It also allows the prefinish tolerance to be much greater than with a smoother prefinish. A smoother prefinish reduces the roller burnishing effect, which means the prefinished size must be much closer to the acceptable tolerance. The ideal prefinished prior to roller burnishing is related to such variables as material, hardness, and tolerance requirements. Final part requirements of size, finish, and hardness will dictate preparation requirements, and some trial runs may be necessary in order to determine the ideal prefinish.

Final size of a workpiece depends upon its initial dimension and surface preparation. A very smooth prefinish cannot be reduced in size as much as a rougher prefinish. Successful results from roller burnishing depend upon the prefinish operation and will vary as shown in the Stock Displacement chart on page 31. The displacement column in the chart shows how much change in size may be expected for each starting or prefinished condition.

If sizing, finishing, and work hardening are to be optimized for a particular application, initial part preparation is critical and fine tool adjustment is necessary.

Part preparation & operating parameters for roller burnishing

Tool adjustment procedure

Cogsdill manufactures a variety of standard Roll-a-Finish Tools. Although the detail numbers and nomenclature for the adjustment components differ somewhat for the various tool series, the adjustment procedure for all Roll-a-Finish tools is basically the same.

For all SRMR and SRMB tools, a rear castellated adjusting collar interlocks with a threaded and castellated bearing collar to keep the tool in adjustment. In order to adjust the tool, retract the spring-loaded adjusting collar and rotate the threaded bearing collar. This will alter the position of the tapered mandrel or race in relation to the tapered rolls, thereby changing the effective tool diameter within the specified diameter range. XBB tools are adjusted by rotating the housing on the threaded mandrel shank. Tool adjustment requires the use of an Allen wrench. SRMR, SRMB and XBB series tools adjust in increments of .0025mm (.0001 inch), and in increments of .005mm (.0002 inch) for tools over 50mm in diameter.

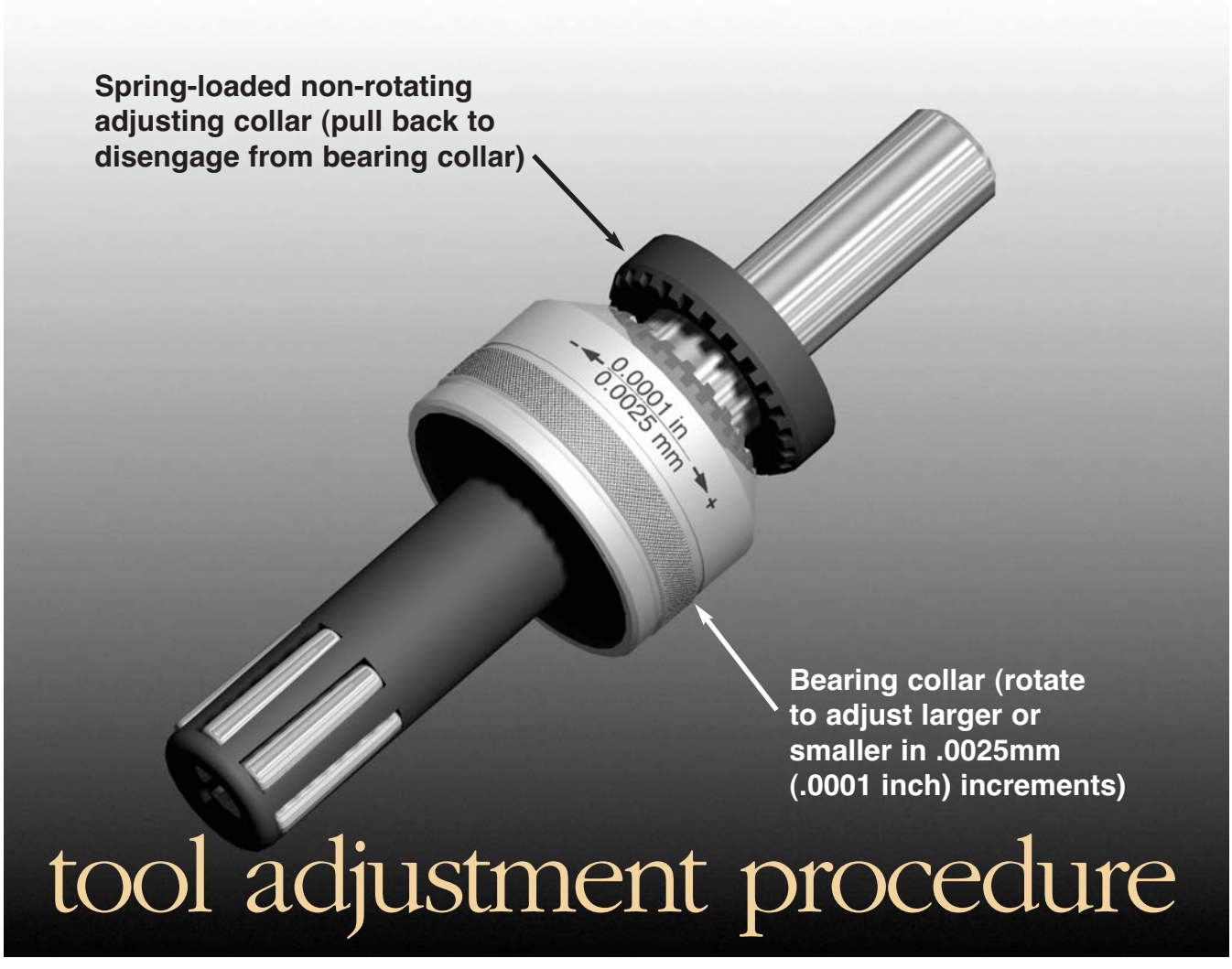

Part preparation & operating parameters for roller burnishing

Follow these steps when adjusting a Roll-a-Finish® tool:

1. The first step is to rotate the adjustment collar assembly in a plus or minus direction as marked on the tool until the workpiece will just slip over the rolls. This procedure is similar to plug or ring gaging a part. This will set tool working diameter the same as prepared part diameter.
2. Retract the tool from the part and increase tool working diameter by approximately .01 to .02mm (.0005 to .001inch) over the prepared part diameter. On SRMR and SRMB tools, a one-notch change equals .002mm (.0001 inch) diameter change. On tools over 50.0mm in diameter, calibrations are in .005mm (.0002 inch) increments.
3. Now, run the first part and check for finish. Readjust tool diameter as necessary to obtain desired surface finish. Several trial runs may be necessary; however, once properly adjusted, only one pass of the tool is required for roller burnishing.
4. Measure finished parts for size. The difference between the prefinished and roller burnished sizes represents actual stock displacement. If necessary, modify the prefinished size to allow for more or less stock displacement.
5. If the prefinished size is changed, the burnishing tool must be adjusted by the same amount as the cutting tool to produce the desired finish.

Stock displacement

Approximate prefinishes resulting from common machining operations and the probable displacements produced by the roller burnishing process are listed below:

PREFINISH OPERATION	Prefinish surface	
	Micrometers	Microinches
Hone	.25-.50	10-20
Grind	.50-1.00	20-40
Ream	1.00-1.50	40-60
Bore, Turn (Medium)	2.00-3.00	80-100
Bore, Turn (Rough)	3.75-5.00	150-200

PREFINISH OPERATION	Expected displacement by burnishing	
	Millimeters	Inches
Hone	.002-.005	.0001-.0002
Grind	.005-.010	.0002-.0004
Ream	.010-.015	.0004-.0006
Bore, Turn (Medium)	.020-.030	.0008-.0012
Bore, Turn (Rough)	.038-.050	.0015-.0020

Surface finishes of .25micrometers (10 microinches) Ra and below are obtainable provided that the prepared surface is uniform and tearfree.

Tool operation

Standard Roll-a-Finish tools are designed for right-hand rotation.

When the Roll-a-Finish tool reaches the end of the desired roller burnishing length, pull the tool from the bore. This reverse action causes the rolls to collapse slightly in the cage to make withdrawal easy.

Part preparation & operating parameters for roller burnishing

Coolant

For most metals use any standard grade, light-weight, low-viscosity lubricating oil, or any mineral, sulphur, or soluble oil compatible with the metal or alloy to be burnished and recommended for fine surface finishing.

For aluminum or magnesium alloys use a highly refined oil-based coolant with low viscosity.

For cast iron a mineral seal oil is ideal. Flooding the part is recommended.

Filtration of the coolant is highly recommended to remove metal particles and grit.

Maintenance & repair

The Roll-a-Finish tool requires only routine maintenance. For long tool life and optimum performance, tool should be kept free of grit and other foreign matter. Rolls, cage, and mandrel should be examined at regular intervals and replaced when the desired size and finish are no longer obtainable. It is always advisable to replace a complete set of rolls, as there will be some sacrifice of tolerance and finish quality if new and used rolls are mixed.

Tools may be returned to Cogsdill for inspection and reconditioning to return them to original operating performance. Contact Cogsdill's Returns Department for a Return Material Authorization Number to assist us in processing your repair order. We will advise price and delivery before proceeding with the repair.

Interchangeability

Mandrel and race assemblies are interchangeable with tool adjustment assemblies within specified ranges. For example, the SRMR and SRMB tools from 12,0 to 25,0mm have a common adjustment assembly.

All standard Roll-a-Finish tools 6,0mm and above can be changed from through-hole to bottoming by changing cage and rolls.

Speed and feed recommendations for internal Roll-a-Finish tools with self-feeding cages (1)

DIAMETER		RPM	FEED PER REVOLUTION	
MM	INCHES		MM	INCHES
4.76	.187	1500-4300	.2540-.3048	.010-.012
6.35	.250	1500-4300	.2540-.3048	.010-.012
7.94	.312	1300-3700	.3048-.3556	.012-.014
9.52	.375	1020-3100	4064-.5080	.016-.020
11.11	.437	875-2600	.4572-.5842	.018-.023
12.70	.500	765-2300	.4572-.5842	.018-.023
14.28	.562	675-2000	.4572-5842	.018-.023
15.87	.625	610-1800	.7620-.9144	.030-.036
19.05	.750	505-1500	.7620-.9144	.030-.036
22.22	.875	335-1300	.8636-.9906	.034-.039
25.40	1.000	380-1100	1.219-1.321	.048-.052
28.57	1.125	340-1000	1.295-1.422	.051-.056
31.75	1.250	305-900	1.625-1.752	.064-.069
34.92	1.375	275-825	1.956-2.083	.077-.082
38.10	1.500	255-750	2.286-2.413	.090-.095
41.27	1.625	235-700	2.133-2.235	.084-.088
44.45	1.750	215-650	2.464-2.565	.097-.101
47.62	1.875	205-610	2.794-2.895	.110-.114
50.80	2.000	190-575	3.124-3.226	.123-.127
53.97	2.125	180-540	3.454-3.581	.136-.141
57.15	2.250	170-510	3.785-3.912	.149-.154
60.32	2.375	160-485	4.115-4.242	.162-.167
63.50	2.500	150-460	4.445-4.572	.175-.180
66.67	2.625	145-435	2.235-2.286	.088-.090
69.85	2.750	140-415	2.413-2.464	.095-.097
73.02	2.875	130-400	2.565-2.591	.101-.102
76.20	3.000	125-380	2.565-2.616	.101-.103
88.90	3.500	110-325	3.251-3.302	.128-.130
101.60	4.000	95-285	3.912-3.962	.154-.156

(1) When the self-feeding tool is used with power feed, the feed rate MUST exceed the maximum feed rate (shown at left) for a given size. This prevents the rolls from collapsing in the cage and eliminating the burnishing action.

POWER FEEDING CAGES: The feed rate for SRMR and SRMB tools and bottoming style tools with power-feeding cages must be from .25mm/rev. (.010 IPR) up to the maximum rate (shown at left) for the self-feeding tools for the same diameter.

Through-Hole (No Helix)

Through-Hole (Helix)

Bottoming* (No Helix)

**Mandrel may be cut off if it does not allow full bottoming.*

Part preparation & operating parameters for roller burnishing

TROUBLE-SHOOTING GUIDE		
PROBLEM	**POSSIBLE CAUSE**	**SOLUTION**
1. FINISH		
A. Scratches	Foreign material Worn rolls.	Clean filter coolant. Inspect – Replace if discolored or marred.
B. Flaking.	Too much interference. Too much friction.	Adjust for less interference More lubricity in coolant.
C. Spiral marks. Residual tool marks.	Premachining too smooth, or not uniform.	Sharper radius cutting tool, replace or sharpen. Increase feed of cutting tool.
	Not enough burnishing.	Increase tool diameter, pressure support part wall if thin, or consider Bearingizing.
	Roll stuck, or foreign matter stuck in pocket.	Inspect and clean cage, replace if necessary.
	Roll paths not overlapping.	Decrease feed rate.
	Chips left in bore.	Flush prior to burnishing.
2. SIZE		
A. Too small or large after burnishing.	Incorrect stock allowance.	Adjust cutting tool (presize) and Roll-a-Finish tool.
B. Bell mouth or taper.	Premachining problem	Check **before** burnishing.
	Misalignment.	Correct or use floating holder.
	Tool runout.	Indicate mandrel-repair.
	Part has thin wall, irregular geometry, or no support.	Support by fixture or consider Bearingizing.
3. (MISC.)		
A. Rolls hit on entry.	Misalignment.	Correct alignment.
		Chamfer part-if possible.
	Too much roll projection.	Retain with O'Ring or similar device if a short bore. Use smaller cage, if interchangeable. Or, select a tool with your part size on the higher end of the adjustment range.
B. Can't burnish entire length of bore.	Tool too short.	Use R-style or consider special tool.
	Mandrel hits bottom of bore or fixture.	Grind mandrel tip off, use larger tool size, or consider special tool.

Effects of poorly machined surfaces on burnishing

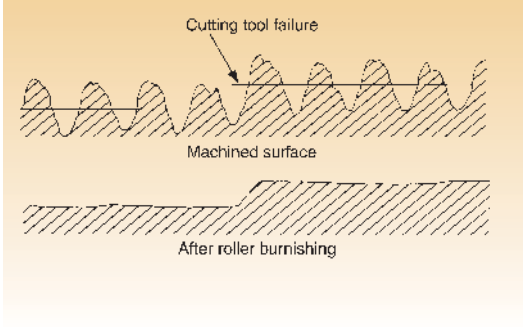

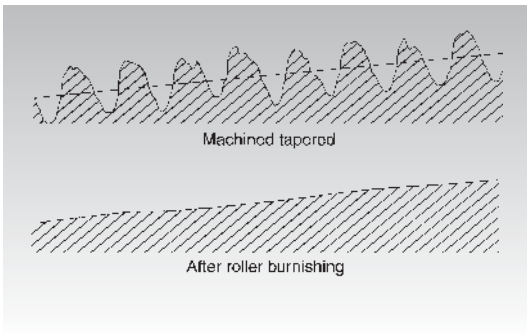

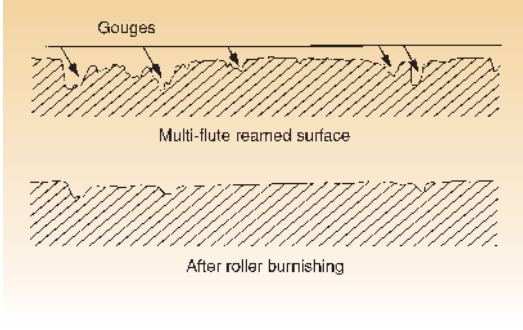

Special applications & tool designs

specials

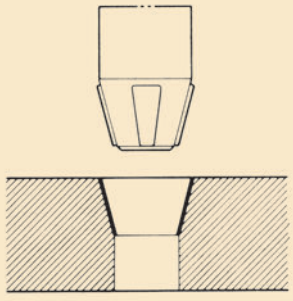
Internal taper

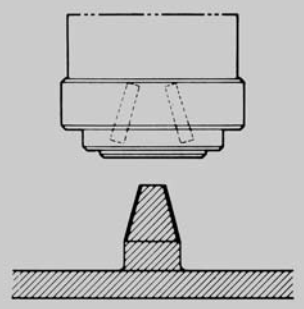
External taper

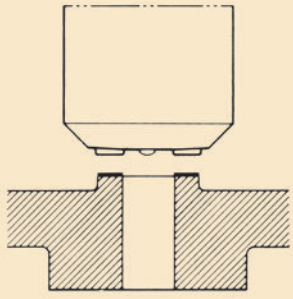
Flat surface

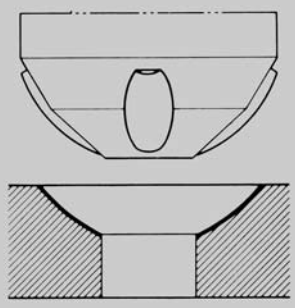
Spherical surface

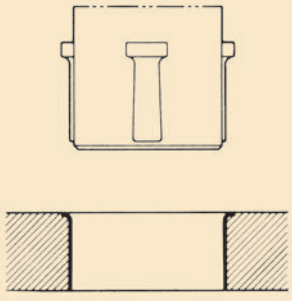
Contour

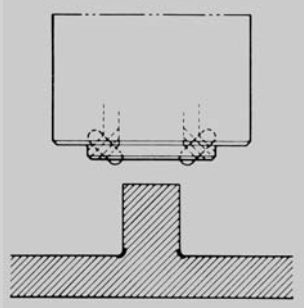
Fillet

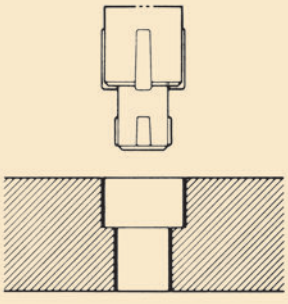
Multi-diameters

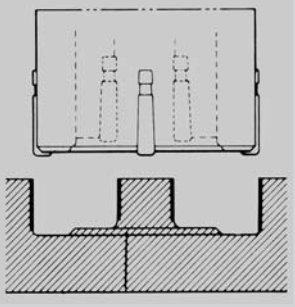
Combination ID & OD

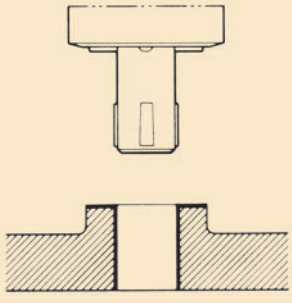
Combination ID & flat surface

In addition to our line of standard Roll-A-Finish® tools for IDs and ODs, Cogsdill offers solutions for burnishing virtually any part configuration.

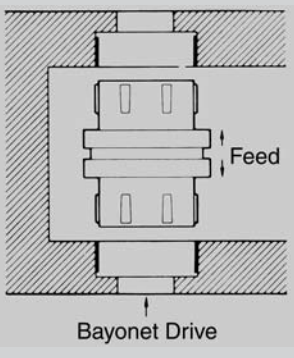

Special applications & tool designs

In 1993 Cogsdill Tool Products acquired The Madison Microller® Product Line. In 2012, Cogsdill acquired the Roll-A-Matic burnishing product line. With the combined experience of over a century of designing and manufacturing burnishing tools and machines, Cogsdill is unquestionably the world leader in special burnishing tool designs and applications engineering.

A few examples of our thousands of special tool designs are shown below:

Flat surface tool

Internal taper tool

Where part size varies and surface finish is the primary requirement, expanders, contractors, and compensating tools produce consistently excellent surface finishes.

Expander tool

Air-actuated compensating tool

Send us a part print or detailed sketch and request a quotation.

External roller burnishing machines

CX® machines

Cogsdill's CX machines roller burnish cylindrical diameters of any length in seconds. Parts are sized, finished and work hardened by highly polished, precision rollers in one quick pass. Fatigue life, corrosion resistance and appearance are enhanced as your parts are accurately sized and finished. Various model options are designed to meet your manufacturing requirements. Equipment options are available to accommodate through-feed applications, parts with obstructions, and part-to-part size variations.

CX-2000

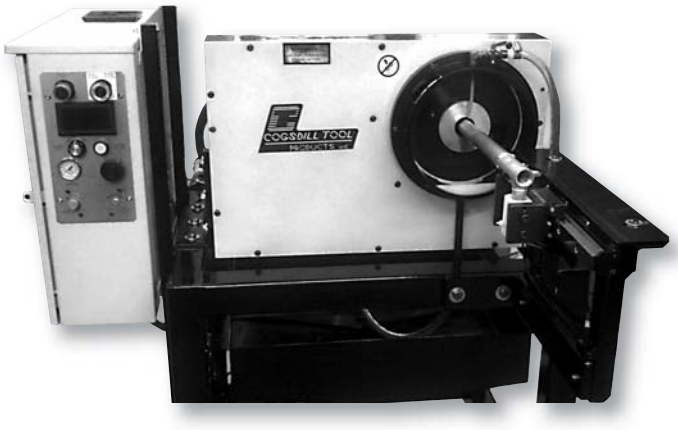

CX-3000

Machines shown above are not to scale.

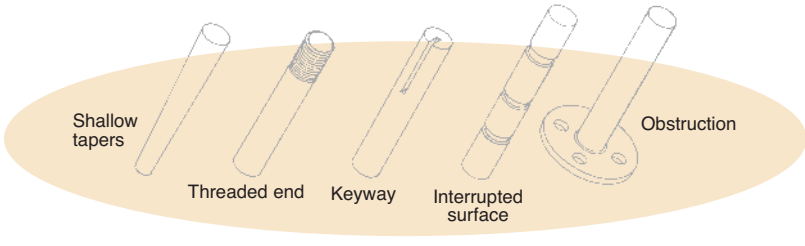

Shown above are examples of various types of parts which are processed by CX external roller burnishing.

Product features

Versatility

All ductile or malleable metals with hardness up to R/C 40 can be roller burnished. Cylindrical parts of any length, bars, tubing, wire and stranded cable may all be processed with Cogsdill's self-contained, self-feeding roller burnishing machines. A continuously variable speed drive allows the operator to select the optimum production rate for obtaining the desired size and finish. An adjustable tilt base makes it possible to select the ideal feed angle for automatic or manual loading.

Several sub-assembly options are available to suit various application requirements (see page 43, "CX Sub-Assembly Options").

Coolant systems are designed and recommended to supply the necessary part lubrication for burnishing. Part supports, consisting of V-guides faced with teflon, are available for thru-feed applications where long parts require support, or as an aid in workpiece alignment during high production runs. Various power options are available to meet your electrical requirements. The CX-2000 is a heavy duty, high production machine that is ideally used where size or portability is a factor. The CX-3000 is a heavy duty, high production machine designed for permanent installation on the production floor.

These options, combined with the standard features, make the Cogsdill CX machine a useful and versatile machine tool. However, should the wide array of options available with our standard tooling and equipment fail to meet your particular requirements, a variety of special tooling is available on special order. Please submit a part print and request a quotation.

Accurate sizing

Tolerances within .0001 inch (.0025mm) are attainable, depending on variables such as material type, hardness, pre-machining method, and the finish on the part prior to burnishing. A prepared tolerance of .002 inch (.05mm) can usually be reduced by 50 % (.001 inch /.02mm).

Low micro finishing

One pass through a Cogsdill CX machine can quickly reduce a 20-40 microinch Ra (0.5 to 1.0 micrometer) ground surface or an 80-120 microinch (2-3 micrometers)(Ra) turned surface to a mirrorlike 5 microinch (.125 micrometer)(Ra) finish or lower. Parts varying in size as much as .005 inch (.127mm) can be burnished to the same low microfinish with the use of an optional pressure control unit (see Versatility section). The roller burnishing process significantly improves bearing surface over other types of finishing processes and is ideal for shafts running in bushings or oil seals.

Work hardening

Surface hardening of the workpiece is achieved simultaneously with sizing and finishing. With certain materials, increases in surface hardness of up to 3 points on the Rockwell "C" scale are attainable. The smooth, dense, hardened surface produced by the roller burnishing process extends wear life, improves resistance to corrosion and reduces fatigue failures. Friction is also reduced, resulting in noise reduction where shafts are running in bushings.

Appearance improvement

Machined parts (turned or ground) can be roller burnished to lustrous, mirrorlike finishes. Subsequent plating applications will often be improved as roller burnishing removes surface patterns and blemishes resulting from prior machining operations.

Fast processing

Cogsdill CX machines process parts in seconds. Parts are sized, finished and work hardened in one pass. Cylindrical parts of any length are processed at speeds up to 30 feet/minute (9.14 meters/minute).

Roller burnishing can often eliminate time consuming and expensive finishing operations such as grinding or lapping. The result is better quality parts, produced in less time, at a lower cost.

Adjustability

Race assemblies, the working components of the CX machine, are designed to process specific nominal size workpieces. CX-1 race assemblies for diameter range .045 to 1.004 inch (1.15 to 25.50mm) are adjustable in increments of .0001 inch (.0025mm) over a range of .021 inch (.53mm) for each nominal size. CX-2 race assemblies for diameter range .963 to 2.504 inch (25.46 to 63.60mm) are adjustable in increments of .0002 inch (.0051mm) over a range of .041 inch (1.04mm) for each nominal size (see pages 40 and 42 for total range of adjustability for each CX model). Race assemblies are interchangeable within the limits of the operating range for a given model. Changing race assemblies is a 5 minute job requiring little more than the removal of four machine screws.

CX-2000 External roller burnishing machine

CX-2000

The CX-2000 External Roller Burnishing Machine offers quiet, smooth operation in a rigid and stable machine design. Two models are available: an adjustable speed model, with variable frequency drive and digital speed display; and an economical fixed speed model (which can be adjusted, if necessary). Coolant capability is standard on both models. An optional portable cabinet with integral coolant pump is offered (and recommended).

The CX-2000 uses the same interchangeable race assemblies as the CX-3000-1 for part diameters from .045 to 1.004 inch (1.15 to 25.50mm).

An easy-access control panel is located on the front of the machine. There are three standard power options: 220V single-phase, 220V three-phase, or 440V three-phase. An adjustable tilt base allows for the ideal feed angle, from horizontal to vertical, for automatic or manual part loading. Optional part supports are available for long parts or for workpiece alignment in high-production runs.

Height: 16 inches (406mm)

Width: 31 inches (787mm)

Depth: 20 inches (508mm)

CX-2000 External roller burnishing machine

CX-2000 External Roller Burnishing Machine features product design improvements to enhance machine performance.

Interchangeable race assemblies size, finish, and work-harden parts in seconds; through-feed or up to a stop-and release.

Four sub-assembly options enhance machine versatility (interference-to-a-stop shown).

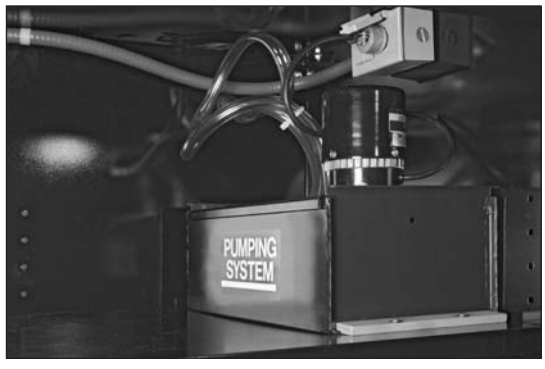

Coolant system lubricates parts and flushes away chips. When optional portable cabinet is purchased, pump comes mounted inside cabinet.

Easy-access control panel is located on the front of the machine.

CX-2000

CX-3000 External roller burnishing machine

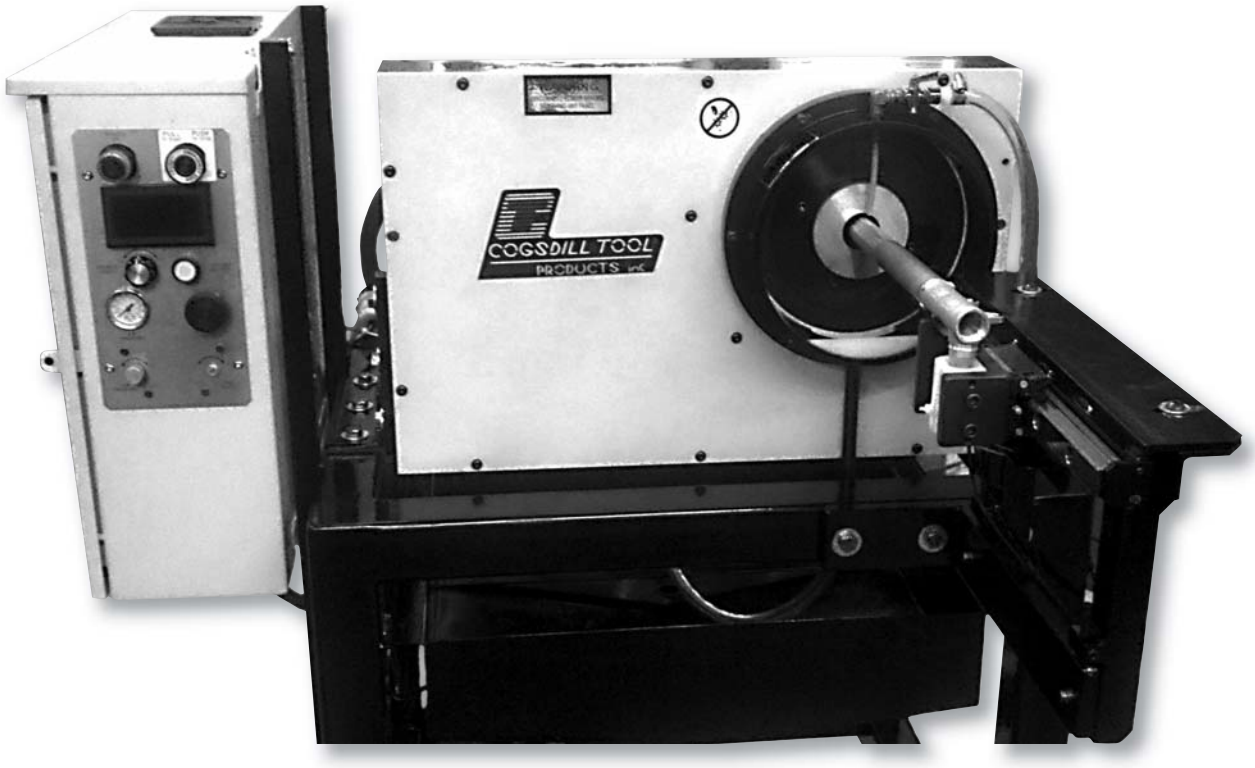

CX-3000

The new CX-3000 External Roller Burnishing Machine replaces the former CX-1 and CX-2 model machines. The CX-3000 is designed for permanent installation on the production floor. The CX-3000 machine is available in two models: the CX-3000-1 for part diameters from .045 to 1.004 inch (1.15 to 25.50mm), and the CX-3000-2 for part diameters from .963 to 2.504 inch (25.46 to 63.60mm). The large part diameter range capacity is accomplished by using one base model machine and two interchangeable spindle assemblies that can be changed by either the customer or by our trained technicians at our factory.

The CX-3000 machine comes standard as an adjustable speed model with variable frequency drive and digital speed display. A coolant system is also standard on the CX-3000 machine.

An easy-access control panel is located on the front of the machine. An adjustable tilt base for ideal feed angle for automatic or manual part loading is available as an option. Part supports are also available as an option for long parts or for workpiece alignment in high-production runs.

For additional information or to obtain a quotation on the CX-3000 External Roller Burnishing Machine, please contact Cogsdill or one of our Sales Engineers. Also contact Cogsdill for more information on CX Race Assemblies for part diameters over 1.000 inch (25.4mm).

CX sub-assembly options

The CX machine is designed for versatility. Four CX sub-assembly options allow almost any part configuration to be burnished. The machine operates in one of two modes: interference or compensating.

In the interference mode, the working diameter is set slightly smaller (about .0005 inch, or .01mm) than the diameter of the workpiece. The interference mode is used to accurately size and finish parts simultaneously in one fast pass.

The air pressure-controlled compensating unit allows the machine to automatically adjust to different part diameters, within a given range, in order to achieve a surface finish which is consistent regardless of variations in part size. The compensating mode is designed for applications where finish, rather than size, is the primary requirement. The compensating unit can accommodate a size variation of up to .005 inch (.13mm) in a single part, or from part to part. It also allows through-feed burnishing of parts with tapers or enlarged sections where the maximum diameter difference is no more than .030 inch (.76mm).

Each of the two modes is available for through-feed burnishing or with an adjustable stop-and-release mechanism for burnishing parts up to shoulders or obstructions.

The four available CX sub-assemblies are as follows:

- Sub-assembly "A": Interference through-feed
- Sub-assembly "B": Interference to a stop
- Sub-assembly "C": Compensating through-feed
- Sub-assembly "E": Compensating to a stop

CX speed and feed recommendations

The information below is intended as a starting point for selecting the speed and feed rate that will produce optimum results in CX® burnishing. Factors such as material type, part configuration, and coolant must be taken into consideration.

Spindle speed is not a critical factor in the successful operation of CX machines. Roller burnishing tools and machines are very tolerant in regard to the effect of spindle speed on resulting surface finishes.

The feed rates are based on using a stationary cage (the part is free to rotate; the anti-rotation spacer is installed). If the thrust bearing is used (i.e., the part is not allowed to rotate) the feed rate will be approximately 1/2 of the feed rate shown.

CX® Speed and feed recommendations

PART NUMBER	RPM	CX IN./REV.	CX-B IN./REV.	CX-R IN./REV.	CX-RB IN./REV.
CX-062	1800	.063	.031	.053	.029
CX-125	1800	.074	.037	.068	.047
CX-187	1800	.084	.042	.075	.037
CX-250	1800	.094	.047	.085	.042
CX-312	1800	.104	.052	.095	.047
CX-375	1800	.115	.057	.106	.053
CX-438	1400	.145	.072	.133	.066
CX-500	1400	.156	.078	.144	.072
CX-562	1400	.166	.083	.154	.077
CX-625	1200	.176	.088	.164	.082
CX-687	1200	.187	.093	.175	.087
CX-750	1200	.197	.098	.185	.092
CX-812	1000	.220	.111	.208	.104
CX-875	900	.233	.116	.218	.109
CX-934	900	.243	.121	.228	.114
CX-1000	900	.254	.127	.238	.119

The production rate of the machine can be calculated as follows:

PRODUCTION (inches per minute) IPM = FEED RATE (inches per revolution) IPR x SPEED OF THE MOTOR (revolutions per minute) RPM

RACE ASSEMBLY TYPES*: CX: Interference through-feed; CX-B: Interference to a stop; CX-R: Compensating through-feed; CX-RB: Compensating to a stop

*corresponding to sub-assembly options

CX
external roller burnishing machines

CX® Race Assemblies

The same race assemblies are used for the CX-2000 and the CX-3000-1 external roller burnishing machines. Those race assemblies are shown below, in both interference and compensating styles.

For information on race assemblies for CX-3000-2 machines, contact Customer Service.

INTERFERENCE-STYLE

PART NUMBER	DIAMETER RANGE	
	IN.	MM
CX-062	.045-.066	1.14-1.68
CX-078	.061-.082	1.55-2.08
CX-094	.077-.098	1.96-2.49
CX-109	.092-.113	2.34-2.87
CX-125	.108-.129	2.74-3.28
CX-141	.124-.145	3.15-3.68
CX-156	.139-.160	3.53-4.06
CX-171	.154-.175	3.91-4.45
CX-187	.170-.191	4.32-4.85
CX-203	.186-.207	4.72-5.26
CX-219	.202-.223	5.13-5.66
CX-234	.217-.238	5.51-6.05
CX-250	.233-.254	5.92-6.45
CX-266	.249-.270	6.32-6.86
CX-281	.264-.285	6.71-7.65
CX-297	.280-.301	7.11-7.65
CX-312	.295-.316	7.49-8.03
CX-328	.311-.332	7.90-8.43
CX-344	.327-.348	8.31-8.84
CX-359	.342-.363	8.69-9.22
CX-375	.358-.379	9.09-9.63
CX-391	.375-.395	9.53-10.03
CX-406	.389-.410	9.88-10.41
CX-422	.405-.426	10.29-10.82
CX-438	.420-.441	10.67-11.2
CX-453	.436-.457	11.07-11.61
CX-469	.452-.473	11.48-12.01
CX-484	.467-.488	11.86-12.4
CX-500	.483-.504	12.27-12.8
CX-516	.499-.520	12.68-13.21
CX-531	.514-.535	13.06-13.59

PART NUMBER	DIAMETER RANGE	
	IN.	MM
CX-547	.530-.551	13.46-14.00
CX-562	.545-.566	13.84-14.38
CX-578	.561-.582	14.25-14.78
CX-594	.577-.598	14.56-15.19
CX-609	.592-.613	15.03-15.57
CX-625	.608-.629	15.44-15.98
CX-641	.624-.645	15.85-16.38
CX-656	.639-.660	16.23-16.76
CX-672	.655-.676	16.64-17.17
CX-688	.671-.692	17.04-17.58
CX-703	.686-.707	17.42-17.96
CX-719	.702-.723	17.83-18.36
CX-734	.717-.738	18.21-18.75
CX-750	.733-.754	18.62-19.15
CX-766	.749-.770	19.03-19.56
CX-781	.764-.785	19.41-19.94
CX-797	.780-.801	19.81-20.35
CX-812	.795-.816	20.19-20.73
CX-828	.811-.832	20.60-21.13
CX-844	.827-.848	21.01-21.54
CX-859	.842-.863	21.39-21.92
CX-875	.858-.879	21.79-22.33
CX-891	.874-.895	22.20-22.73
CX-906	.889-.910	22.58-23.11
CX-922	.905-.926	22.98-23.52
CX-938	.921-.942	23.39-23.93
CX-953	.936-.957	23.77-24.31
CX-969	.952-.973	24.18-24.71
CX-984	.967-.988	24.56-25.10
CX-1000	.983-1.004	24.97-25.50

COMPENSATING-STYLE

PART NUMBER	DIAMETER RANGE IN.	DIAMETER RANGE MM
CX-062	.058-.070	1.47-1.78
CX-078	.074-.095	1.88-2.41
CX-094	.090-.111	2.29-2.82
CX-109	.105-.126	2.67-3.20
CX-125	.121-.142	3.07-3.61
CX-141	.137-.158	3.48-4.01
CX-156	.152-.173	3.86-4.39
CX-171	.167-.188	4.24-4.78
CX-187	.183-.204	4.65-5.18
CX-203	.199-.220	5.06-5.59
CX-219	.215-.236	5.46-5.99
CX-234	.230-.251	5.84-6.38
CX-250	.246-.267	6.25-6.78
CX-266	.262-.283	6.66-7.19
CX-281	.277-.298	7.04-7.57
CX-297	.293-.314	7.44-7.98
CX-312	.308-.329	7.82-8.36
CX-328	.324-.345	8.23-8.76
CX-344	.340-.361	8.64-9.17
CX-359	.355-.376	9.02-9.55
CX-375	.371-.392	9.42-9.96
CX-391	.387-.408	9.83-10.36
CX-406	.402-.423	10.21-10.74
CX-422	.418-.437	10.62-11.10
CX-438	.434-.455	11.02-11.56
CX-453	.449-.470	11.41-11.94
CX-469	.465-.486	11.81-12.34
CX-484	.480-.501	12.19-12.73
CX-500	.496-.517	12.60-13.13
CX-516	.512-.533	13.01-13.54
CX-531	.527-.548	13.39-13.92

PART NUMBER	DIAMETER RANGE IN.	DIAMETER RANGE MM
CX-547	.543-.564	13.79-14.33
CX-562	.558-.579	14.17-14.71
CX-578	.574-.595	14.58-15.11
CX-594	.590-.611	14.99-15.52
CX-609	.605-.626	15.37-15.90
CX-625	.612-.642	15.55-16.31
CX-641	.637-.658	16.18-16.71
CX-656	.652-.673	16.56-17.09
CX-672	.668-.689	16.97-17.50
CX-688	.684-.705	17.37-17.91
CX-703	.699-.720	17.76-18.29
CX-719	.715-.736	18.16-18.69
CX-734	.730-.751	18.54-19.08
CX-750	.746-.767	18.95-19.48
CX-766	.762-.783	19.36-19.89
CX-781	.777-.798	19.74-20.27
CX-797	.793-.814	20.14-20.68
CX-812	.808-.829	20.52-21.06
CX-828	.824-.845	20.93-21.46
CX-844	.840-.861	21.34-21.87
CX-859	.855-.876	21.72-22.25
CX-875	.871-.892	22.12-22.66
CX-891	.887-.908	22.53-23.06
CX-906	.902-.923	22.91-23.44
CX-922	.918-.939	23.32-23.85
CX-938	.934-.955	23.72-24.26
CX-953	.949-.970	24.11-24.64
CX-969	.965-.986	24.51-25.04
CX-984	.980-1.001	24.89-25.43
CX-1000	.996-1.017	25.30-25.83

Diamond burnishing tools

For producing low microinch finishes on shafts or faces of any diameter, or on large bores.

- *Four designs allow use on most turning machines, manual or CNC*
- *Replaceable, polished diamond insert*
- *Adjustable for optimum burnishing pressure*

Cogsdill Diamond Burnishing Tools are simple, efficient tools designed to produce mirror-like finishes on a wide range of ferrous and non-ferrous part surfaces on most turning machines.

Set up and cycle times are short, even for unskilled operators. In all cases, the replaceable diamond insert can be changed quickly; on some models without removing the tool holder from the machine.

Four tool designs to suit your application requirements:

- **DB-1** For general purpose machining
- **DB-2** For use where work length is restricted
- **DB-3** and **DB-4** For use on CNC machining centers – the tool holders are offset so that the diamond insert is on center

The Cogsdill Diamond Burnishing Tool is designed to produce high quality, low microinch burnished finishes on shafts, large bores, and faces. With most metals, a turned or ground part with a properly prepared 40 to 60 microinch finish can be burnished to a 4 to 8 microinch finish in seconds. Cast iron can usually be burnished to an 8 to 15 microinch finish.

Cogsdill Diamond Burnishing Tools can burnish virtually any size stock; from carbon steels to tool steels, cast iron to alloys, and most ferrous and non-ferrous metals. The premium quality diamond burnishing insert is polished and contoured to provide superior finishes and excellent tool life.

Since set up and operation is relatively simple, no special operator skills are required. Diamond Burnishing Tools are versatile . . . various models are designed for use in the tool post of a manual lathe, automatic, or in CNC equipment. The tools can be used on both large and small diameters, and are ideal for short production runs. The Diamond Burnishing Tool can produce quality finishes on interrupted surfaces, such as a shaft with a keyway or the face of a flange having a series of bolt holes.

While the tool must be used with coolant, no special coolant is required. Straight oils, soluble oils, and synthetic coolants can be used to provide the necessary lubrication.

Replaceable diamond insert is polished and contoured for superior finishes and long tool life.

diamond burnishing tools

How it works

The Cogsdill Diamond Burnishing Tool is mounted in the tool post of the desired machine. The diamond burnishing point is brought into contact with the workpiece at the centerline of the part and perpendicular to the surface being finished. The tool is then fed into the workpiece an additional .002 or .003 inch (.05 or .08mm) to allow the diamond insert to become disengaged from the stop in the holder. The spring, with its preload, forces the diamond against the workpiece. The tool is then fed along the surface of the rotating workpiece to produce a mirrorlike finish.

As a recommended starting point the adjusting screw should be tightened (turn clockwise) until all clearance between the push rod and the spring is removed. Then tighten the screw another 1 to 2 turns which will compress the spring to provide the necessary preload to the diamond insert. This is the recommended starting point for mild steel. Slight adjustments in the burnishing pressure can be made, if necessary, to achieve the optimum finish. To adjust the burnishing pressure, tighten the adjustment screw to increase pressure or loosen the screw (turn counterclockwise) to reduce the pressure.

The prefinish on most metals should be approximately 40 to 60 R.M.S. for best results. A feed rate of .003 to .004 inches (.076 to .102mm) per revolution at speeds up to 750 surface feet per minute (229 surface meters per minute) is generally recommended when using the Cogsdill Diamond Burnishing Tool.

Normally, after the tool has been set to provide the .002 to .003 inch (.05 to .08mm) "interference", it can be fed onto the rotating work-piece and allowed to feed off. The slight radius of the diamond tip is sufficient to cause the tool to "climb over" the edge of the part and begin its burnishing action. Likewise, if an interrupted surface is burnished, such as a shaft with a keyway or a flange with bolt holes, the tip of the tool will drop into the interruption but "climb up" the other edge due to the radius on the diamond.

CAUTION: It is important NOT to exceed the recommended amount of interference. An excessive projection of the diamond insert into any surface interruption could cause tool breakage, as the diamond insert could not perform its "climbing" action. (Note: Adjustment of the burnishing force does not affect the amount of interference.)

Note: Diamond burnishing tools do not have the advantage of an overlapping effect as with multi-roll tools, and for this reason slower feed rates and/or multiple passes over the part may be required in order to produce the desired finish.

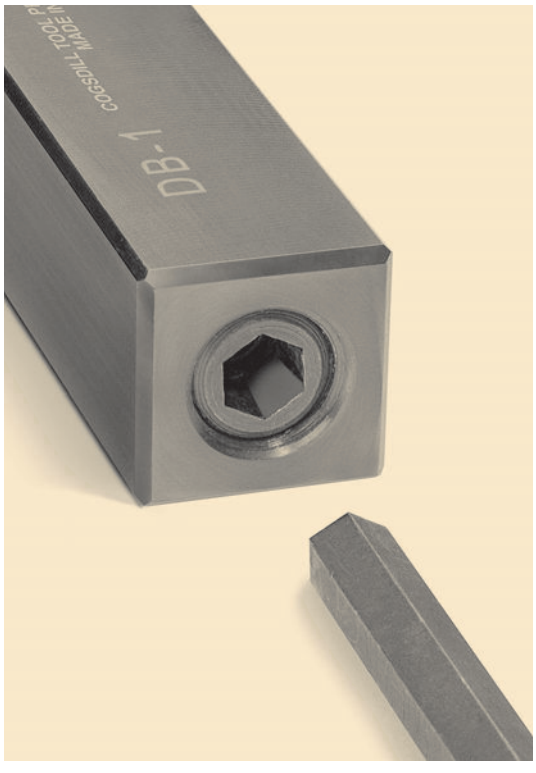

Diamond Burnishing Tools are adjustable for optimum burnishing pressure. For the DB-1 and DB-2 models, the adjustment screw is located in the end of the tool. For models DB-3 and DB-4, the adjustment screw is located on the side of the tool.

Standard tool specifications

DB-1

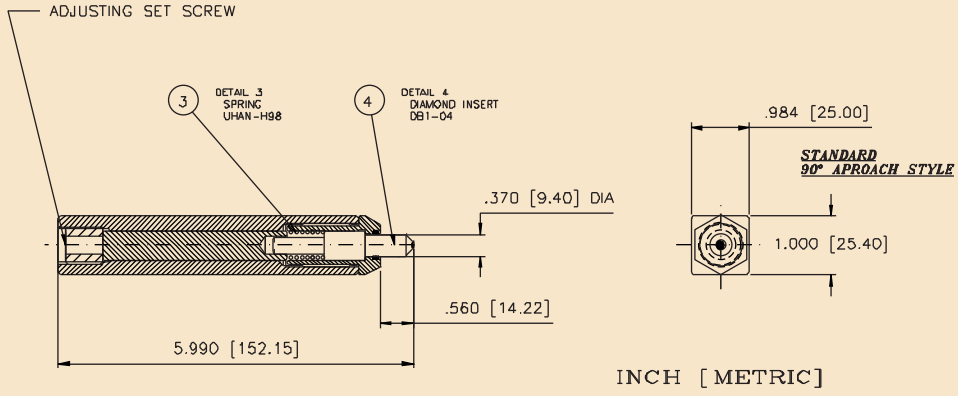

DB-2

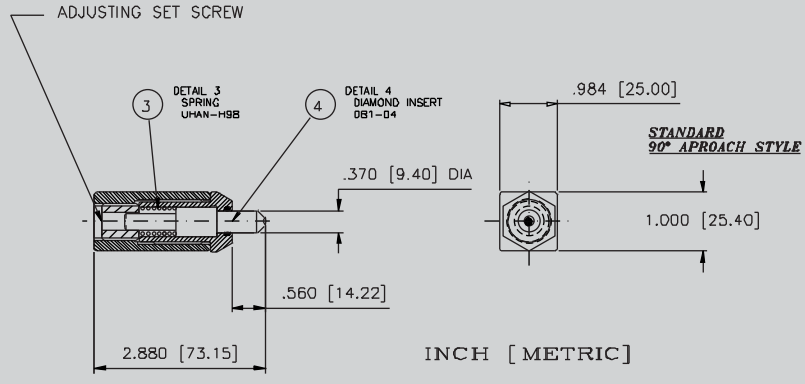

DB-3

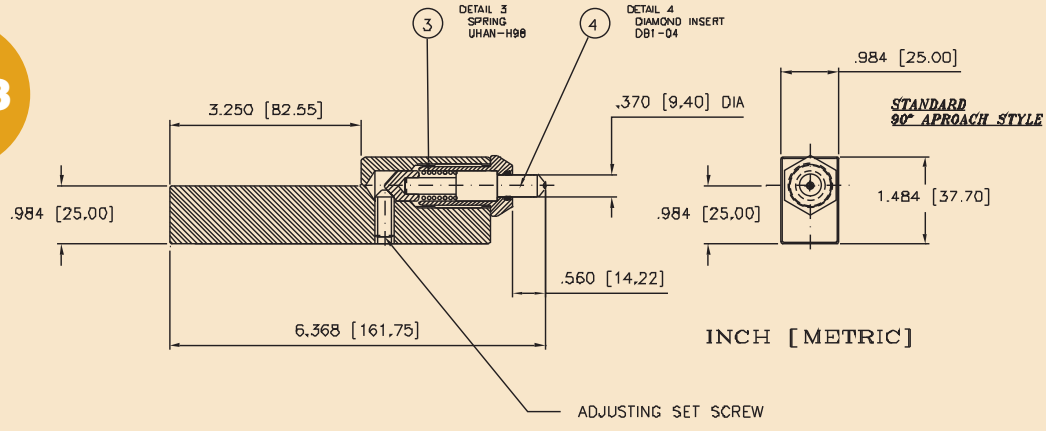

DB-4

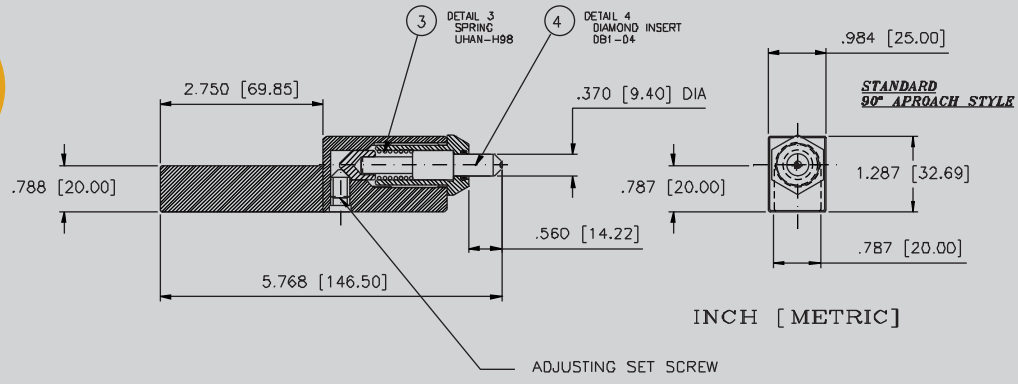

Universal™ burnishing tools

For burnishing shafts, faces, tapers, contours, and relatively large IDs (greater than 2.750 inches/69.85mm)

- *Boring-bar style and Indexable turning-holder style designs*
- *Tool designs to suit any part size or configuration, or any turning machine*
- *Low surface finishes*
- *Standard, available off-the-shelf*
- *Adjustable for optimum burnishing pressure*
- *Hardened steel or carbide rollers*

UBT-T indexable turning holder-style burnishing tool

(Left-hand tool shown)

UBT-B1 boring bar-style burnishing tool

Versatility

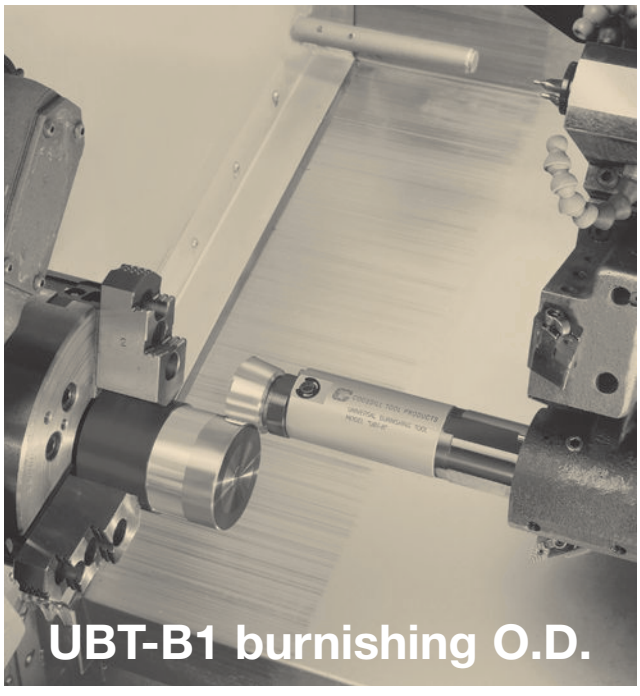

UBT-B1 burnishing O.D.

UBT-B1 burnishing face

UBT-T1 burnishing taper

(Left-hand tool shown)

Burnish
any size, any configuration, on any turning machine.

Turning-holder style

UBT-T1

UBT-T2

UBT-T2 with force gauge

UBT-T3

Roll shield not installed

Roll shield installed above

UBT-T3 with force gauge

Roll shield not installed

Turning-holder style

UBT-T1

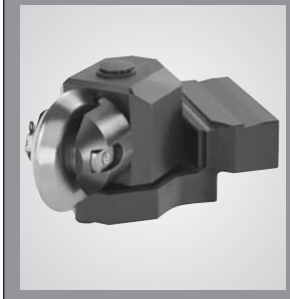

FOR BURNISHING OUTSIDE DIAMETERS, FACES, TAPERS, AND CONTOURS

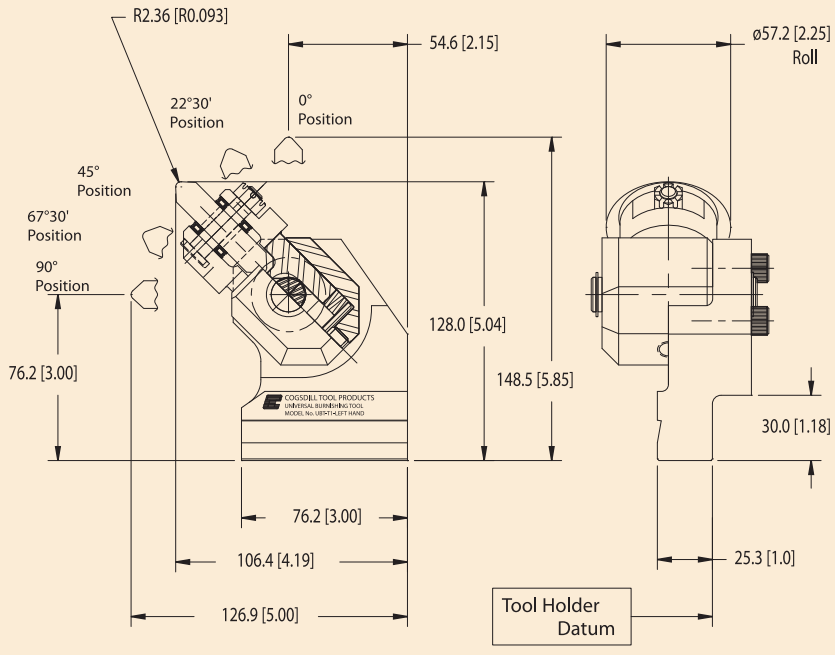

LEFT HAND

UBT-T1-LH

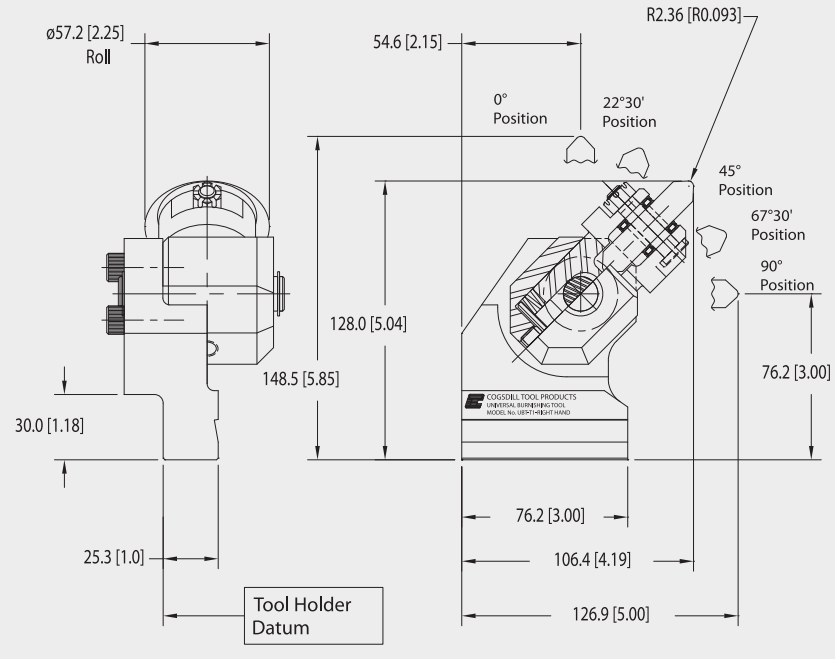

RIGHT HAND

UBT-T1-RH

Turning-holder style

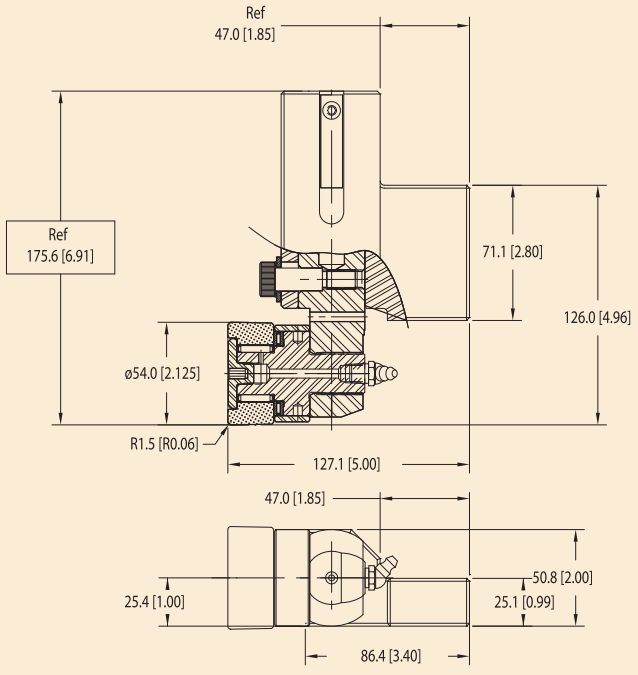

UBT-T2-LH **LEFT HAND**

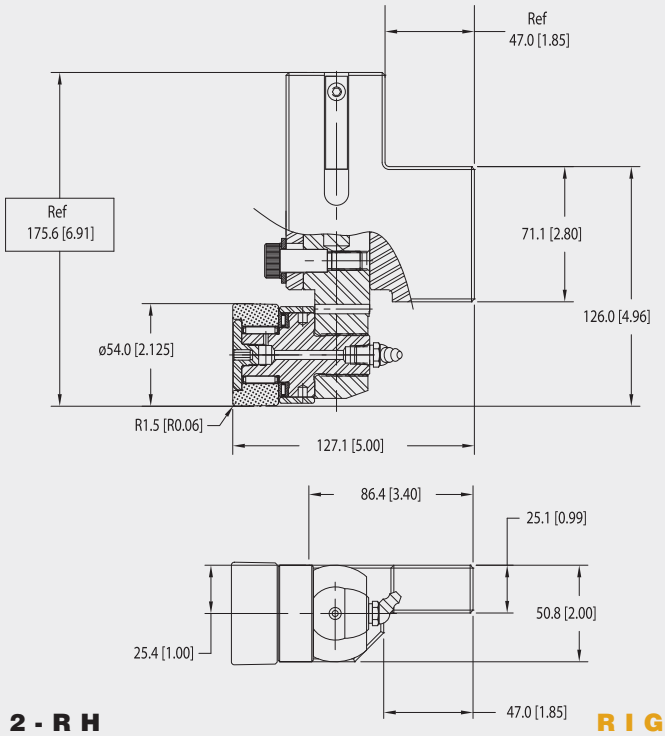

UBT-T2-RH **RIGHT HAND**

UBT-T2

FOR BURNISHING OUTSIDE DIAMETERS

Turning-holder style

UBT-T3

FOR

BURNISHING LARGE

OUTSIDE DIAMETERS,

(GREATER THAN

100mm/4.00 in.)

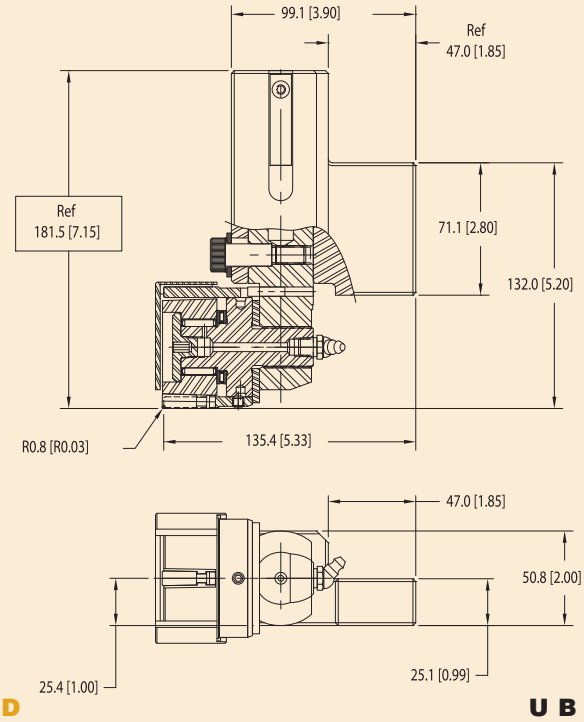

LEFT HAND

UBT-T3-LH

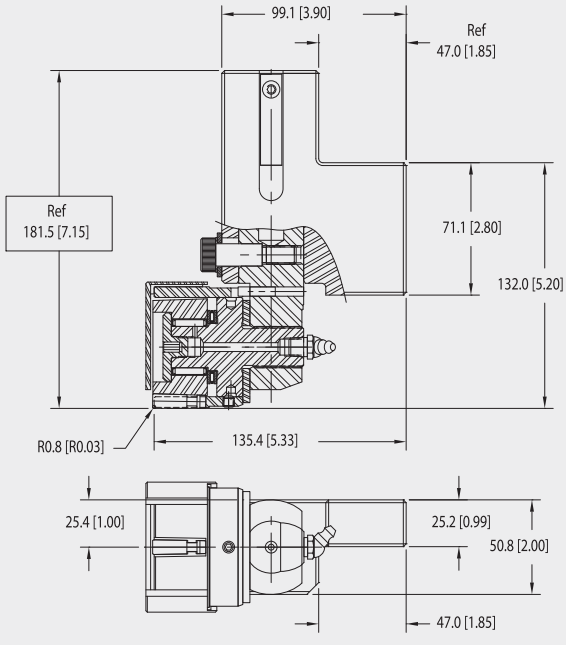

RIGHT HAND

UBT-T3-RH

Set-up and operating instructions for UBT-T Tools

Note: UBT™ single-roll burnishing tools do not have the advantage of an overlapping effect as with multi-roll tools, and for this reason slower feed rates and/or multiple passes over the part may be required in order to produce the desired finish.

UBT-T1 tool set-up

Loosen the load *adjusting screw*. Retighten the *adjusting screw* until it comes into contact with the spring. Continue to tighten screw 1/2 turn past snug. This is a recommended starting point for mild steel.

Adjustments can be made to the burnishing force to achieve optimum finish. Tighten the *adjusting screw* clockwise one turn to increase the burnishing force, or counterclockwise to reduce the force.

Roll orientation is adjustable in 22°-30' increments. Loosen *mounting screws* two turns. Lift *housing* from *shank*. Rotate to desired position, making sure castellations are engaged. Tighten *mounting screws*.

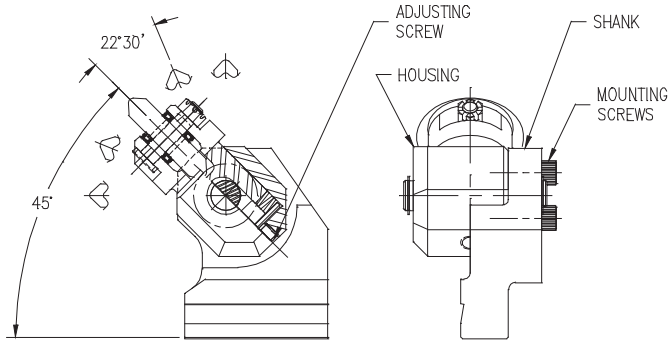

Left hand style shown

UBT-T2 tool set-up

Loosen the load *adjusting screw*. Retighten the *adjusting screw* until it comes into contact with the spring. Continue to tighten screw four turns past snug. This is a recommended starting point for mild steel.

Adjustments can be made to the burnishing force to achieve optimum finish. Tighten the *adjusting screw* clockwise to increase the burnishing force, six turns total, or counterclockwise to reduce the force.

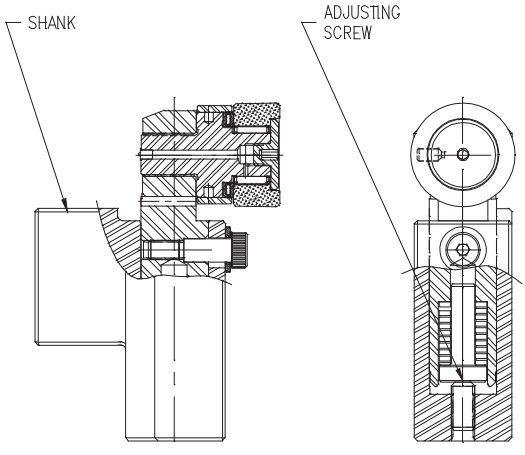

Left hand style shown

UBT-T3 tool set-up

Loosen the load *adjusting screw*. Retighten the *adjusting screw* until it comes into contact with the spring. Continue to tighten screw two turns past snug. This is a recommended starting point for mild steel.

Adjustments can be made to the burnishing force to achieve optimum finish. Tighten the load *adjusting screw* clockwise to increase the burnishing force, six turns total, or counterclockwise to reduce the force.

To index to a new roll station, pull off *cover*. Loosen *locking screws* and slide *cage* forward approximately 0.157 (4.0mm) until it disengages from *pin*. Rotate *cage* approximately 60°, until *pin* aligns with slot in *cage*, and push back. Tighten locking screws and replace *cover* in position shown.

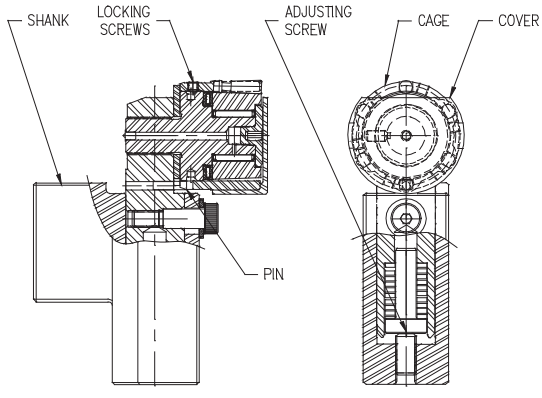

Left hand style shown

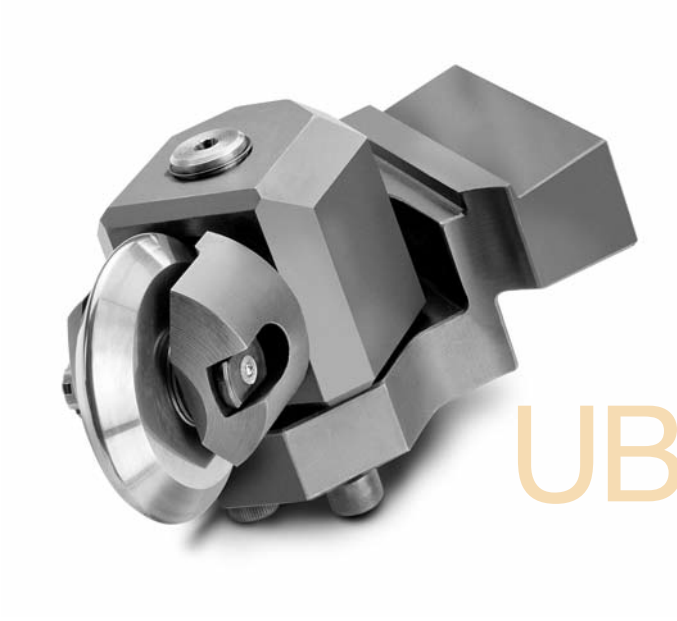

UBT-T TOOLS

Set-up and operating instructions for UBT-T tools

UBT-T tool operation

Mount any UBT-T tool in the desired turning station. Use a UBT-T tool that corresponds with the respective turning tool. Bring the tool into contact with the part to be burnished; contact has occurred when you see the mandrel rotating.

Feed the tool another 0.003-0.005 inch (0.08-0.13mm) into the part to provide interference between the roll and part so that the roll will float in its spring travel. Interference should not be used to increase burnishing force; burnishing force should only be adjusted with the load adjusting screws. This ensures the tool can be fed on/off the part and across interruptions without damage to the tool or workpiece.

For optimum results and long tool life, coolant is required. Any soluble, synthetic, or straight oil can be used. Whenever possible, and for best results, the tool should be fed towards the spindle when burnishing diameters and towards the centerline when burnishing faces. (Note: UBT-T2 and UBT-T3 tools cannot be used to burnish faces.)

ROLLS FOR UBT-T TOOLS

ITEM NO.	TOOL TYPE	ROLL TYPE & RADIUS
UBT-006	UBT-T1	HARDENED STEEL, .093 IN. (2.36MM)
UBT-007	UBT-T1	HARDENED STEEL, .030 IN. (0.76MM)
UBT-010	UBT-T1	CARBIDE, .093 IN. (2.36MM)
UBT-015	UBT-T2	HARDENED STEEL, .060 IN. (1.52MM)
UBT-016	UBT-T2	CARBIDE, .060 IN. (1.52MM)
6100-708-00312	UBT-T3	HARDENED STEEL, .030 IN. (0.76MM)

Speed and feed recommendations for UBT-T tools

SPEED	
SFM	M/MIN.
750	230

FEED	
IPR	MM/REV.
0.001/0.006	0.02/0.15

Lubrication of UBT-T tools

All UBT-T tools should be periodically greased (approximately every 24 hours of operation). We recommend the use of high-quality Lithium complex grease.

UBT-T Tools with force gauge

- *Adaptable to all new UBT-T2 and UBT-T3 tools.*
- *Gauge available in English units (pounds) or metric units (newtons).*

UBT-T2 with gauge

COMPLETE TOOL	
UBT-T2-LH-GS	LH TOOL W/ENGLISH (POUNDS) GAUGE
UBT-T2-LH-GM	LH TOOL W/METRIC (NEWTONS) GAUGE
UBT-T2-RH-GS	RH TOOL W/ENGLISH (POUNDS) GAUGE
UBT-T2-RH-GM	RH TOOL W/METRIC (NEWTONS) GAUGE

GAUGE ASSEMBLY	
UBT-T2-LH-GSA	LH ENGLISH (POUNDS) GAUGE
UBT-T2-LH-GMA	LH METRIC (NEWTONS) GAUGE
UBT-T2-RH-GSA	RH ENGLISH (POUNDS) GAUGE
UBT-T2-RH-GMA	RH METRIC (NEWTONS) GAUGE

LH- LEFT HAND RH - RIGHT HAND

UBT-T3 with gauge

COMPLETE TOOL	
UBT-T3-LH-GS	LH TOOL W/ENGLISH (POUNDS) GAUGE
UBT-T3-LH-GM	LH TOOL W/METRIC (NEWTONS) GAUGE
UBT-T3-RH-GS	RH TOOL W/ENGLISH (POUNDS) GAUGE
UBT-T3-RH-GM	RH TOOL W/METRIC (NEWTONS) GAUGE

GAUGE ASSEMBLY	
UBT-T3-LH-GSA	LH ENGLISH (POUNDS) GAUGE
UBT-T3-LH-GMA	LH METRIC (NEWTONS) GAUGE
UBT-T3-RH-GSA	RH ENGLISH (POUNDS) GAUGE
UBT-T3-RH-GMA	RH METRIC (NEWTONS) GAUGE

LH- LEFT HAND RH - RIGHT HAND

UBT-T Tools force gauge assembly

UBT-T force gauge assembly

- *For use on UBT-T2 and UBT-T3 tools.*
- *Available with English (pounds) or metric (newtons) gauge.*
- *Two mounting brackets are supplied with the gauge assembly allowing mounting of the gauge on either side of the tool offering optimum viewing of the gauge.*

UBT-T force gauge adjustment procedure

UBT-T gauge adjustment

- Adjust **load adjusting screw** to touch internal spring.
- Set indicator to "0" with **zero indicator screw**.
- Tighten **load adjusting screw** until desired load is shown on indicator.
- Touch off on part.
- Compress tool onto part approximately 5 pounds (22 newtons) as shown on the indicator.

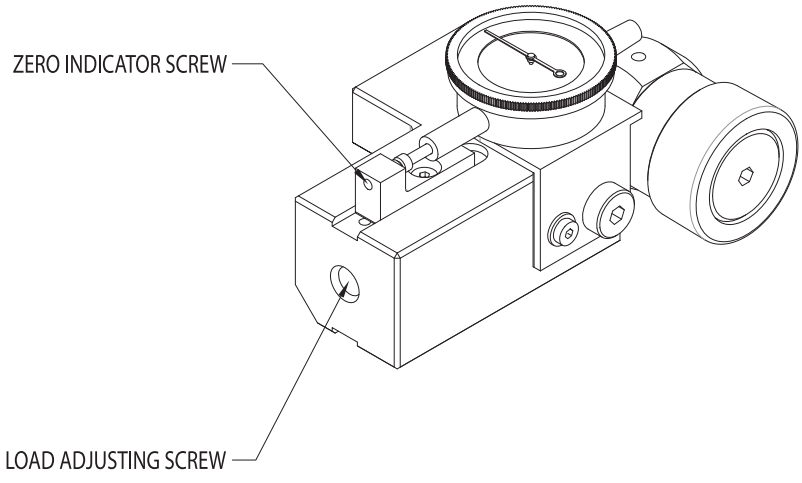

Boring-bar style

Boring-bar style

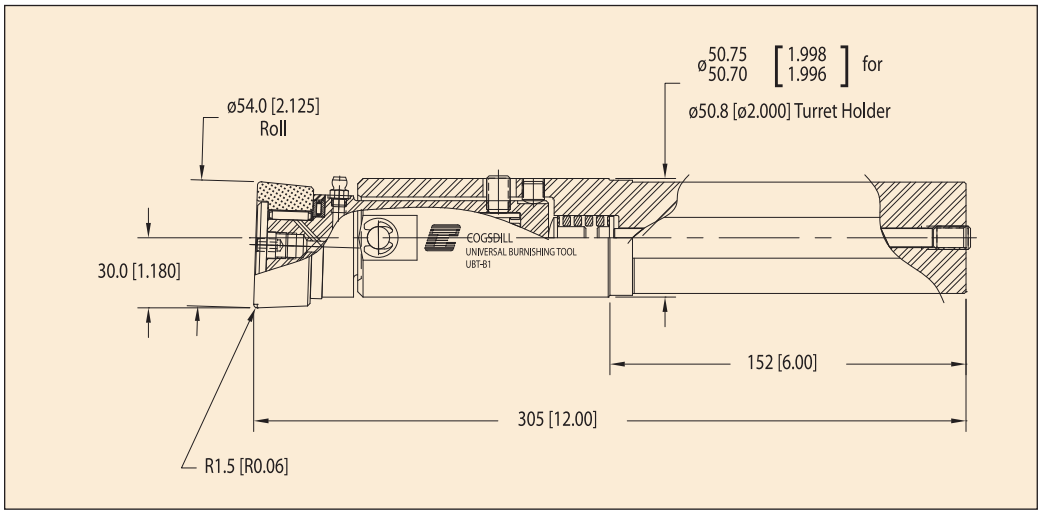

UBT-B1

FOR BURNISHING OUTSIDE DIAMETERS, FACES, AND LARGE INSIDE DIAMETERS (ID'S GREATER THAN 70mm/2.75 in.)

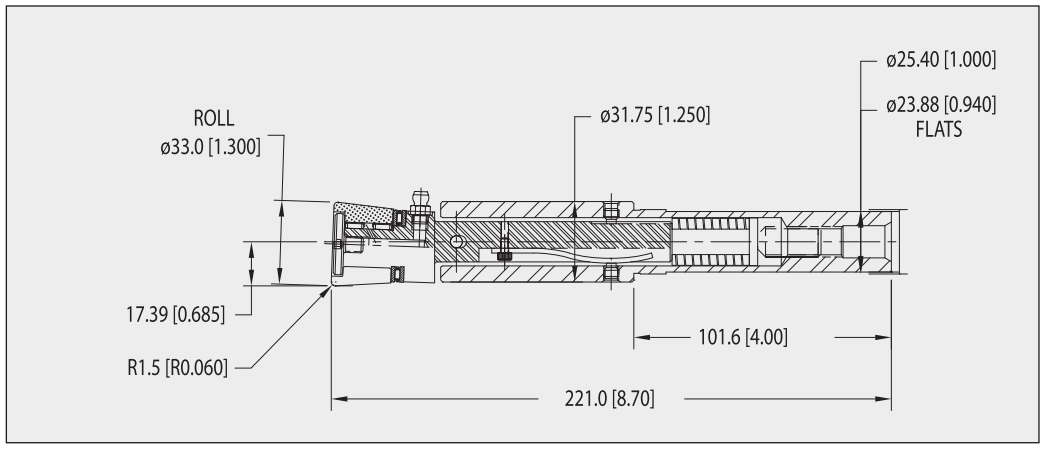

UBT-B2

A SMALLER VERSION OF THE UBT-B1 (ID'S GREATER THAN 39.6mm/1.56 IN.)

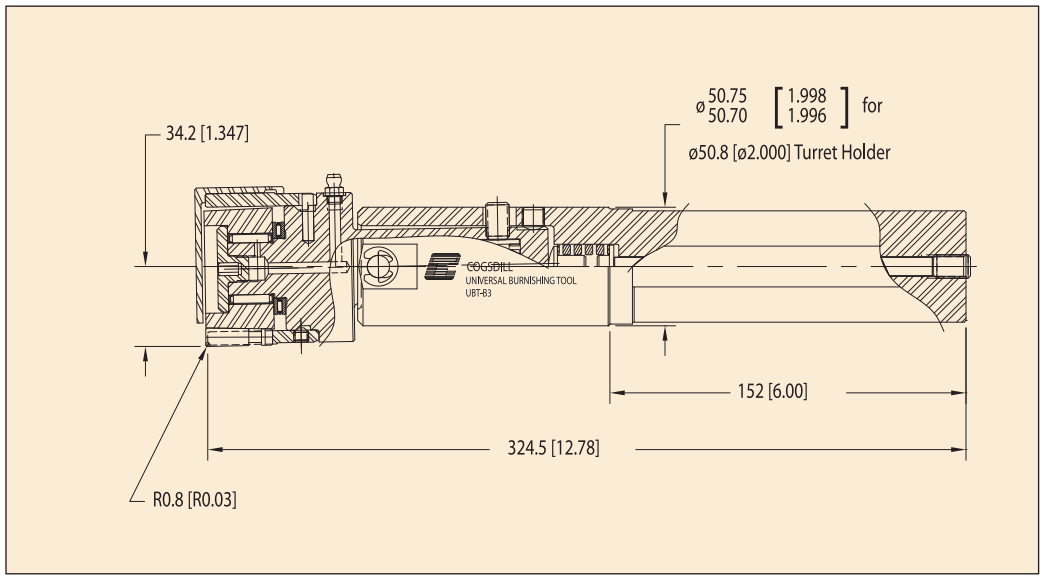

UBT-B3

FOR USE IN SMALLER INSIDE DIAMETERS (IDS GREATER THAN 70MM/2.75 IN.) OR ON LARGE OUTSIDE DIAMETERS (GREATER THAN 100mm/4.00in.)

Set-up and operating instructions for UBT-B Tools

Note: UBT™ single-roll burnishing tools do not have the advantage of an overlapping effect as with multi-roll tools, and for this reason slower feed rates and/or multiple passes over the part may be required in order to produce the desired finish.

UBT-B1 tool set-up

Loosen the load *adjusting screws*. Retighten the *adjusting screws* until they come into contact with the spring. Continue to tighten both screws one turn past snug. This is a recommended starting point for mild steel.

Adjustments can be made to the burnishing force to achieve optimum finish. Tighten the *adjusting screws* clockwise to increase the burnishing force, three turns total, or counterclockwise to reduce the force.

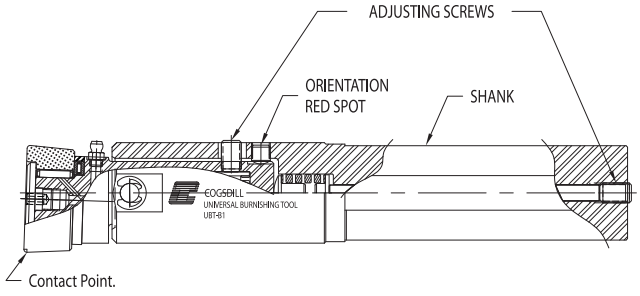

UBT-B2 tool set-up

Loosen the load *adjusting screws*. Retighten the *axial adjusting screw* until it comes into contact with the spring. Continue to tighten three turns past snug. This is a recommended starting point for mild steel.

Tighten the *radial adjusting screw* until it comes into contact with the spring. Continue to tighten 1-1/2 turns past snug. Do not tighten beyond this point; overloading this screw will not allow the tool to float on its spring travel and will impede tool function.

Adjustments can be made to the burnishing force to achieve optimum finish. Tighten the *axial adjusting screw* only. Turn clockwise to increase burnishing force, for a total of 6-1/2 turns, or counter-clockwise to reduce the force.

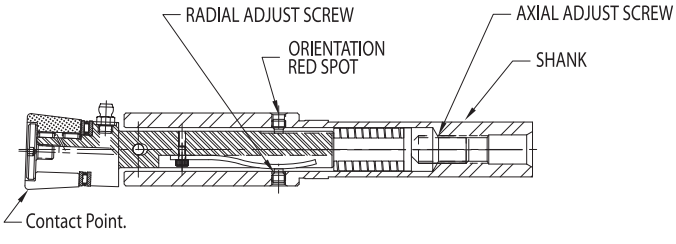

UBT-B3 tool set-up

Loosen the load *adjusting screws*. Retighten the *adjusting screws* until they come into contact with the spring. Continue to tighten both screws one turn past snug. This is a recommended starting point for mild steel.

Adjustments can be made to the burnishing force to achieve optimum finish. Tighten the *adjusting screws* clockwise to increase the burnishing force, for a total of three turns, or counterclockwise to reduce the force.

To index to a new roll station, pull off *cover*. Loosen *locking screws* and slide *cage* forward approximately 0.157 (4.0mm) until it disengages from *pin*. Rotate *cage* approximately 60°, until *pin* aligns with slot in *cage*, and push back. Tighten *locking screws* and replace *cover* in position, exposed *roll* opposite orientation red spot.

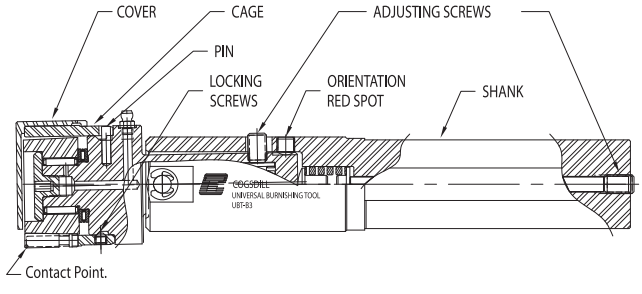

UBT-B TOOLS

Set-up and operating instructions for UBT-B tools

UBT-B tool operation

Mount any UBT-B tool in the desired boring bar station. (Note: The red orientation spot *must* be opposite the contact point.) Bring the tool into contact with the part to be burnished.

Feed the tool another 0.003-0.005 inch (0.08-0.13mm) into the part to provide interference between the roll and part so that the roll will float in its spring travel. Interference should not be used to increase burnishing force; burnishing force should only be adjusted with the load adjusting screws. This ensures the tool can be fed on/off the part and across interruptions without damage to the tool or workpiece.

For optimum results and long tool life, coolant is required. Any soluble, synthetic, or straight oil can be used. Whenever possible, and for best results, the tool should be fed towards the spindle when burnishing diameters and towards the centerline when burnishing faces. (Note: the UBT-B3 tool cannot be used to burnish faces.)

ROLLS FOR UBT-B TOOLS

ITEM NO.	TOOL TYPE	ROLL TYPE & RADIUS
UBT-001	UBT-B1	HARDENED STEEL, .060 IN. (1.52MM)
UBT-002	UBT-B1	CARBIDE, .060 IN. (1.52MM)
UBT-003	UBT-B1	HARDENED STEEL, .030 IN. (0.76MM)
UBT-018	UBT-B2	HARDENED STEEL, .060 IN. (1.52MM)
UBT-019	UBT-B2	CARBIDE, .060 IN. (1.52MM)
6100-708-00312	UBT-B3	HARDENED STEEL, .030 IN. (0.76MM)

Speed and feed recommendations for UBT-B tools

SPEED	
SFM	M/MIN.
750	230

FEED	
IPR	MM/REV.
0.001/0.006	0.02/0.15

Lubrication of UBT-B tools

All UBT-B tools should be periodically greased (approximately every 24 hours of operation). We recommend the use of high-quality Lithium complex grease.

KB® knurling tools

Salvage out-of-tolerance bores or shafts with the two-step ***KB® Knurling-Burnishing "scrap saver" process.***

Worthless scrap or precision part? The KB "Scrap-Saver" process can make the difference.

Cogsdill's KB process is an innovative approach to making the diameter of holes smaller and the diameter of shafts larger. The KB process was originally developed for automotive parts rebuilding industries, where out-of-tolerance bores and shafts on parts that were formerly scrapped are salvaged with the KB process. The process is also applied in original equipment manufacturing.

Roll-a-Finish tool

KB knurling tool

Note: KB knurling tool shown above without adjusting screw.

The KB process

KB is Superior to Conventional Salvage Methods

Conventional salvage methods, including spray welding and chrome plating, are expensive, time-consuming, and often produce unsatisfactory results. These metal-adding processes do not deposit a uniform thickness around the circumference of the hole or shaft; they also deposit metal where it is not wanted, and remachining is required. Often remachining is difficult because no qualified-surfaces are available for alignment.

Another approach is to cut away additional metal and install a bushing or sleeve. Additional time and effort is required for machining and finishing the part to bring it within tolerance.

The KB Process eliminates these problems in two quick steps through the use of two tools. The KB Knurling Tool raises the surface of the oversize bore (or undersize shaft). The Roll-a-Finish Tool roller burnishes the knurled surface to the exact diameter required. (See below, "How It Works.") The entire two-step process can be accomplished in seconds

Improved surface characteristics and lower cost

In addition to the benefits of Knurling/Burnishing as a sizing and salvage method, the process results in a series of plateaus on the same plane in the surface of the metal, thus providing increased contact area. Tests by a major auto manufacturer have shown increases in surface holding power of up to 35% over surfaces which are precision bored to receive press-fit bearings. In many cases the finished boring process may be eliminated altogether. The grooves in the Knurled/Burnished surface are ideally suited for use with an adhesive agent. The grooves are also desirable for the effect of trapping and funneling away foreign matter and grit that might otherwise remain on the bearing surface of the part.

For running fits, the increased contact area diminishes the load carried at any given point on the part surface; this increases the ability of the surface to resist wear. Knurling, like Roller Burnishing, is a metal displacement process, and the work-hardening effect of the tools also contributes to the ability of the Knurled/Burnished surface to resist wear.

The KB Process can result in cost savings in several areas. Machine time can be reduced as much as 10:1. Substantial reductions are achieved in tool cost and tool inventory. Fewer machines and less floor space are required.

Knurling and Burnishing makes holding size easier; this results in savings in inspection time and scrap.

How it works

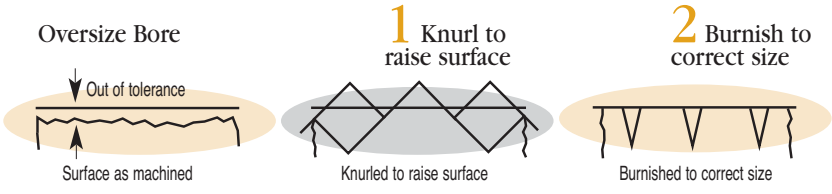

An oversize bore may be machined out-of-tolerance or made oversize by excessive wear. Here's how the KB Process can salvage this part:

2 steps

1 — A Cogsdill KB Knurling Tool displaces material on the oversize hole diameter, raising the surface as much as .030 inch (.76mm) in a diamond-shaped knurled pattern. The bore is now undersize.

2 — A Cogsdill Roll-a-Finish Tool cold works the knurled surface, burnishing the hole to correct size.

The KB process

Tool operation

Knurling may be performed with either the tool or the part rotating. Any ductile or malleable metal may be knurled including aluminum, brass, bronze, ductile iron, steels (up to 40 Rc) and cast iron (except chilled and white cast). Speeds should approximate drilling speeds, and feed rate starting points can be determined from the table below.

Although hand-fed operations are possible on many machines, power feeding is desirable to obtain a more uniform knurl pattern. Return feeds may be two to three times the infeed rate.

The operations should be performed under a flood of coolant. A water soluble, high-lubricity oil is recommended. If coolant cannot be used, speeds and feeds should be reduced by two-thirds to ensure reasonable knurl and pin life.

The tools are adjusted using the adjusting screw located in the center of the tool.

Once the tools are set for size, an unskilled operator can obtain consistently good results, even over long work lengths.

Cogsdill knurling tools do not require accurate location, and in most cases it is recommended to have either the tool or part free to float. Each knurling roll depends on the support of the opposing roll to do its work; therefore, the tools are self-centering.

Typical changes in workpiece diameter, after knurling with medium pitch knurling rolls (20 teeth per circular inch), are as follows: for cast iron, .006 inch (.15mm); for steel, .008 inch (.2mm); for bronze, .010 inch (.25mm); and for aluminum, .012 inch (.30mm).

MATERIAL	SPEED		FEED RATE	
	SFPM	SM/MIN.	IPR	MM/REV
Aluminum or brass	200-300	61-91	.030	.76
Leaded steel	125-150	38–46	.030	.76
Soft cast iron carbon steel	80-120	24-37	.018	.46
# 50 cast iron, medium alloy steel	60-90	18-27	.012	.30
# 65 cast iron, alloy steel (35-40 R/C)	25-35	8-11	.008	.20

Knurling rolls

Worn knurling rolls should be replaced in sets, However, if a knurling roll should be damaged, it may be replaced by a new roll of like hand.

KN-1 and KN-2 knurling rolls are available in medium and coarse pitch; KN-3 rolls are available in medium pitch only. (Medium is 20 teeth per circular inch, and coarse is 14 teeth per circular inch.) Please specify medium or coarse pitch when ordering. Knurling rolls have knurls set at a 45 degree angle. Special angles and pitches are available on special order.

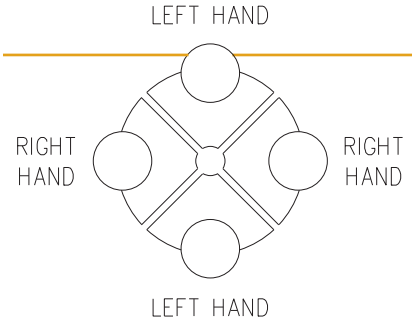

Cogsdill Knurling Tools require an equal number of left and right hand knurling rolls, placed in opposing stations.

Special tools

Special Knurling Tools, including external tools, tools for larger diameters, and fully-bottoming tools, are available on special order. When requesting a quotation for a special tool, please furnish the following data:

1. Part description and part number (if any).
2. A blueprint or sketch of your part.
3. Exactly what job is to be performed; i.e. what particular surface of the part is to be knurled.
4. Material type and hardness.
5. If a salvage job is to be performed, advise how much parts are oversized or undersized.
6. Tolerance requirements.
7. Shank requirements.

Tool design

knurling tool design

Cogsdill Knurling Tools are available for internal applications. External tools are available on special order (see "Special Tools"). All internal Knurling Tools are of similar design with differences only in the number of knurling rolls and the diameter adjustment mechanism.

Small tools from KBN-625 through KBN-1156 are adjusted by turning a hex-head screw in the side of the tool. Tools in this range have two rolls.

The larger internal tools are adjusted by means of a hex-head screw through the center of the tool. The screw is accessible from the front of the tool.

Tools from KBN-1188 through KBN-2969 have four knurling rolls, while those from KBN-3000 through KBN-4000 have six knurling rolls.

All internal Knurling Tools are adjustable over a range of .041 inch (1.04mm), as are Cogsdill Roll-a-Finish tools.

The tool consists of shank, rolls, pins and adjusting screw. Morse taper shanks are standard. The rolls and pins are the only items considered wear parts; these are available from stock. We recommend that at least one spare set of rolls and pins is ordered when a knurling tool is purchased. The pins are retained by a set screw and can be easily removed when it is necessary to replace worn rolls.

All tools are designed for through-hole applications. These tools can also be used on semi-bottoming applications; the tool will work to .080 inch (2.03mm) from the bottom of the bore. Bottoming tools are also available, on special order (see "Special Tools").

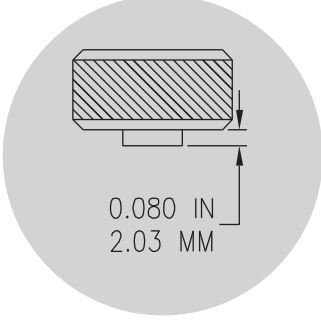

Tool specifications

	Diameter Range			Overall Length		Pins & Knurls	
Tool No.	**Inches**	**Millimeters**	**Shank**	**Inches**	**MM**	**Size**	**Qty. Req.**
KBN-625	.621-.662	15.77-16.81					
KBN-656	.652-.693	16.56-17.60				#KN-3	
KBN-688	.684-.725	17.37-18.42				(.312 Inch	
KBN-719	.715-.756	18.16-19.20				Dia.)	
KBN-750	.746-.787	18.95-19.99					
KBN-781	.777-.818	19.74-20.78					
KBN-812	.808-.849	20.52-21.56					
KBN-844	.840-.881	21.34-22.38					
KBN-875	.871-.912	22.12-23.16					2
KBN-906	.902-.943	22.91-23.95					
KBN-938	.934-.975	23.72-24.77					
KBN-969	.965-1.006	24.51-25.55					
KBN-1000	.996-1.037	25.30-26.34					
KBN-1031	1.027-1.068	26.09-27.13					
KBN-1062	1.058-1.099	26.87-27.91					
KBN-1094	1.090-1.131	27.69-28.73					
KBN-1125	1.121-1.162	28.47-29.51	#2MT	6.75	171.4		
KBN-1156	1.152-1.193	29.26-30.30					
KBN-1188	1.184-1.225	30.07-31.12					
KBN-1219	1.215-1.256	30.86-31.90					
KBN-1250	1.246-1.287	31.65-32.69					
KBN-1281	1.277-1.318	32.44-33.48					
KBN-1312	1.308-1.349	33.22-34.26					
KBN-1344	1.340-1.381	30.04-35.08				#KN-2	
KBN-1375	1.371-1.412	34.82-35.86				(.375 Inch	
KBN-1406	1.402-1.443	35.61-36.65				Dia.)	
KBN-1438	1.434-1.475	36.42-37.47					
KBN-1469	1.465-1.506	37.21-38.25					
KBN-1500	1.496-1.537	38.00-39.04					
KBN-1531	1.527-1.568	38.79-39.83					
KBN-1562	1.558-1.599	39.57-40.61					4
KBN-1594	1.590-1.631	40.39-41.43					
KBN-1625	1.621-1.662	41.17-42.21					
KBN-1656	1.652.-1.693	41.96-43.00					
KBN-1688	1.684-1.725	42.77-43.82					
KBN-1719	1.715-1.756	43.56-44.60					
KBN-1750	1.746-1.787	44.35-45.39					
KBN-1781	1.777-1.818	45.14-46.18					
KBN-1812	1.808-18.49	45.92-46.96					
KBN-1844	1.840-1.881	46.74-47.78					
KBN-1875	1.871-1.912	47.52-48.56					
KBN-1906	1.902-1.943	48.31-49.35					
KBN-1938	1.934-1.975	49.12-50.17					
KBN-1969	1.965-2.006	49.91-50.95	#3MT	7.75	196.8		
KBN-2000	1.996-2.037	50.70-51.74					
KBN-2031	2.027-2.068	51.49-52.53					
KBN-2062	2.058-2.099	52.27-53.31				#KN-1	
KBN-2094	2.090-2.131	53.09-54.13				(.750 Inch	
KBN-2125	2.121-2.162	53.87-54.91				Dia.)	
KBN-2156	2.152-2.193	54.66-55.70					
KBN-2188	2.184-2.225	55.47-56.52					
KBN-2219	2.215-2.256	56.26-57.30					
KBN-2250	2.246-2.287	57.05-58.09					
KBN-2281	2.277-2.318	57.84-58.88					
KBN-2312	2.308-2.349	58.62-59.66					

Tool specifications

	Diameter Range			Overall Length		Pins & Knurls	
Tool No.	**Inches**	**Millimeters**	**Shank**	**Inches**	**MM**	**Size**	**Qty. Req.**
KBN-2344	2.340-2.381	59.44-60.48					
KBN-2375	2.371-2.412	60.22-61.26					
KBN-2406	2.402-2.443	61.01-62.05					
KBN-2438	2.434-2.475	61.82-62.87					
KBN-2469	2.465-2.506	62.61-63.65					
KBN-2500	2.496-2.537	63.40-64.44					
KBN-2531	2.527-2.568	64.19-65.23					
KBN-2562	2.558-2.599	64.97-66.01					
KBN-2594	2.590-2.631	65.79-66.83					
KBN-2625	2.621-2.662	66.57-67.61	#3MT	7.75	196.8		4
KBN-2656	2.652-2.693	67.36-68.40					
KBN-2688	2.684-2.725	68.17-69.22					
KBN-2719	2.715-2.715	68.96-70.00					
KBN-2750	2.746-2.787	69.75-70.79					
KBN-2781	2.777-2.818	70.54-71.58					
KBN-2812	2.808-2.849	71.32-72.36					
KBN-2844	2.840-2.881	72.14-73.18					
KBN-2875	2.871-2.912	71.92-73.96					
KBN-2906	2.902-2.943	73.71-74.75					
KBN-2938	2.934-2.975	74.52-75.57					
KBN-2969	2.965-3.006	75.31-76.35					
KBN-3000	2.996-3.037	76.10-77.14					
KBN-3031	3.027-3.068	76.89-77.93					
KBN-3062	3.058-3.099	77.67-78.71					
KBN-3094	3.090-3.131	78.49-79.53					
KBN-3125	3.121-3.162	79.27-80.31					
KBN-3156	3.152-3.193	80.06-81.10					
KBN-3188	3.184-3.225	80.87-81.92					
KBN-3219	3.215-3.256	81.66-82.70				#KN-1	
KBN-3250	3.246-3.287	82.45-83.49				(.750 Inch	
KBN-3281	3.277-3.318	83.24-84.28				Dia.)	
KBN-3312	3.308-3.349	84.02-85.06					
KBN-3344	3.340-3.381	84.84-85.88					
KBN-3375	3.371-3.412	85.62-86.66					
KBN-3406	3.402-3.443	86.41-87.45					
KBN-3438	3.434-3.475	87.22-88.27					
KBN-3469	3.465-3.506	88.01-89.05	#4MT	8.75	222.2		6
KBN-3500	3.496-3.537	88.80-89.84					
KBN-3531	3.527-3.568	89.59-90.63					
KBN-3562	3.558-3.599	90.37-91.41					
KBN-3594	3.590-3.631	91.19-92.23					
KBN-3625	3.621-3.662	91.97-93.01					
KBN-3656	3.652-3.693	92.73-93.80					
KBN-3688	3.684-3.725	93.57-94.62					
KBN-3719	3.715-3.756	94.36-95.40					
KBN-3750	3.746-3.787	95.15-96.19					
KBN-3781	3.777-3.818	95.94-96.98					
KBN-3812	3.808-3.849	96.72-97.76					
KBN-3844	3.840-3.881	97.54-98.58					
KBN-3875	3.871-3.912	98.32-99.36					
KBN-3906	3.902-3.943	99.11-100.15					
KBN-3938	3.934-3.975	99.92-100.97					
KBN-3969	3.965-4.006	100.71-100.97					
KBN-4000	3.996-4.037	101.50-102.54					

Application data sheet

Roller burnishing tools

COGSDILL-NUNEATON Ltd.

PLEASE PHOTOCOPY & COMPLETE THIS FORM & ENCLOSE WITH YOUR ORDER OR REQUEST FOR QUOTATION. THE DATA WILL BE USED TO ENSURE THAT THE CORRECT TOOL IS FURNISHED FOR YOUR PARTICULAR APPLICATION.

CUSTOMER_____ DATE_____

ADDRESS_____

CITY_____ COUNTY_____ POSTAL CODE_____

CONTACT_____ TELEPHONE_____

FAX_____ E-MAIL ADDRESS_____

TITLE_____

SALES AGENT_____ SALESMAN_____

CUSTOMER'S PART_____

PRINTS INCLUDED YES_____ NO_____ LATER_____

PRIMARY OBJECTIVE SIZE_____ FINISH_____ OTHER_____

THROUGH-HOLE OR BLIND BORE? _____

FINISH DIAMETER(S)_____ TOLERANCE(S)_____

SURFACE FINISH REQUIRED_____ in Ra

WHAT IS THE OPERATION PRIOR TO BURNISHING?_____

_____

PRESIZE(S)_____ TOLERANCE(S)_____

PREFINISH_____ in Ra

LENGTH OF BURNISH_____ MATERIAL_____

MATERIAL CONDITION (HARDNESS OR TENSILE STRENGTH)_____

TYPE OF MACHINE TO BE USED_____ TYPE SHANK_____

EXTERNAL OR INTERNAL COOLANT? _____

IS THE TOOL TO BE RUN HORIZONTALLY OR VERTICALLY? _____

AUTOMATIC TOOL CHANGER? YES _____ NO _____

WEIGHT RESTRICTION _____

TOOL LENGTH RESTRICTION _____

ARE THERE RESTRICTIONS ON DIAMETER OR LENGTH? (FIXTURE INTERFERENCE, SHOULDER, GROOVE, KEYWAY, ETC.)

_____

_____

PRODUCTION REQUIREMENT_____

_____

ADDITIONAL COMMENTS_____

_____

_____

Fax or mail to:

FAX 024 76344433
Cogsdill-Nuneaton Ltd.
Tenlons Road
Nuneaton, England

ATTN: CUSTOMER SERVICE

IMPORTANT

PART PRINT OR DETAILED SKETCH MUST BE SUPPLIED.

Notes

Notes